framatome

BIBLOC

Pressure transmitters qualified severe accident (SA), K1, K2, K3 AD and K3

Overview

Bibloc pressure transmitters are designed and manufactured to perform reliable measurements in nuclear severe environments.

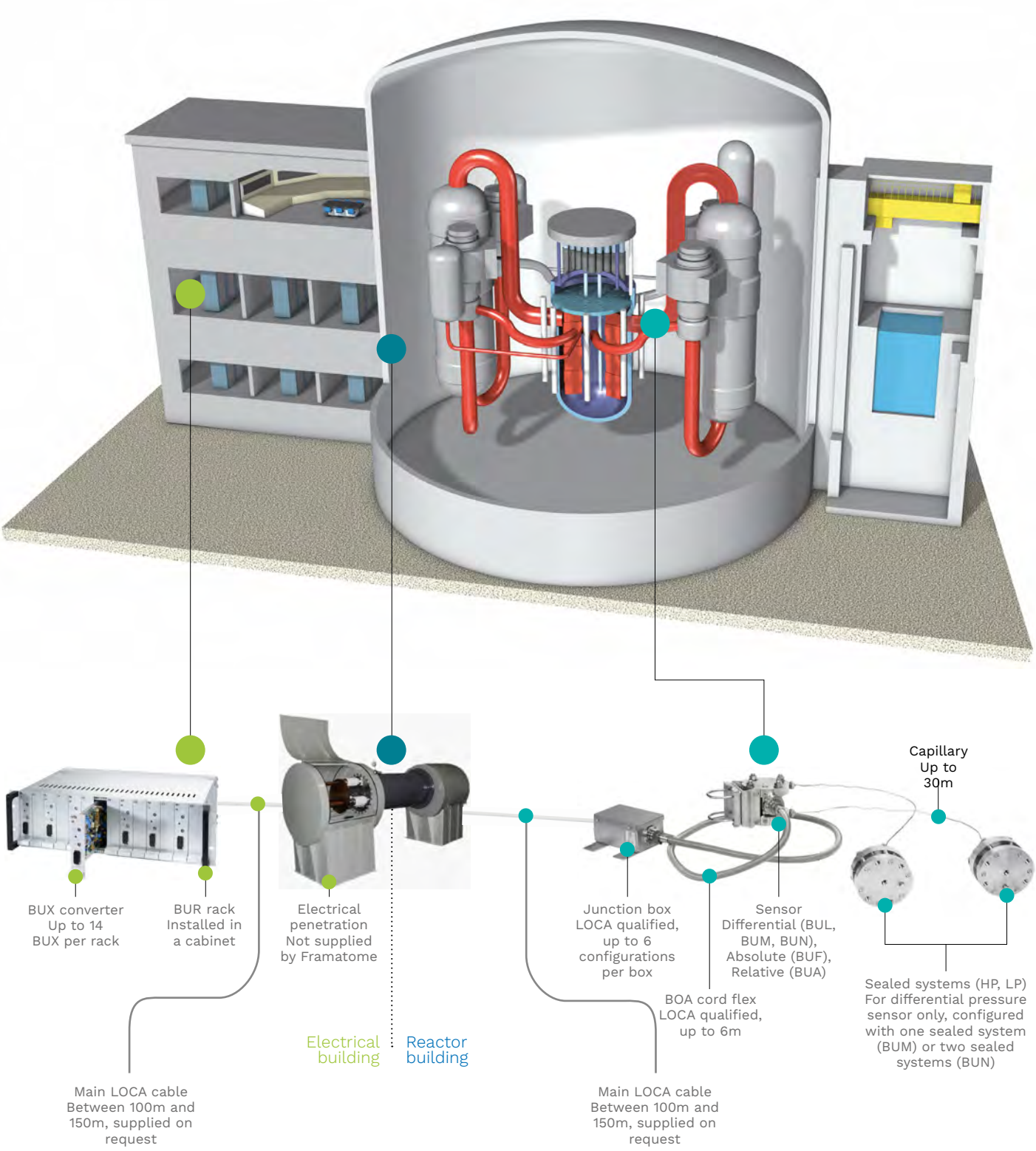

Bibloc is a range of nuclear pressure transmitters designed and manufactured by Framatome specifically for precision and reliable pressure measurements in nuclear severe accident environments.

Bibloc transmitters are available in differential, gauge, and absolute configurations, and allow performing measurements such as pressure, flow and level.

Bibloc transmitters are composed of two distinct parts:

- 1 sensor without electronics, installed in the reactor building,
- 1 deported electronic converter, common to each sensor, installed in the electrical building.

The electronic converter is powered with 24 to 48 VDC and delivers an electrical signal varying from 4 to 20 mA, proportional to the measured pressure.

A constant sine voltage, generated by a 318Hz oscillator of the converter, supplies in series the two inductors making up the sensor's displacement detector.

The mid-point potential of the inductors varies according to the displacement of the magnetic core connected to the measurement element (diaphragm, capsule, or Bourdon gauge).

This potential variation is subjected to synchronous demodulation, processed and amplified.

A correction function eliminates the curvature of the pressure/displacement characteristic of the sensitive element, and the effect of temperature on the measurement cell.

The unique structure of the Bibloc transmitters means the electronics are not exposed to the extreme conditions of the reactor building – radiation and temperature – and facilitates and reduces maintenance time.

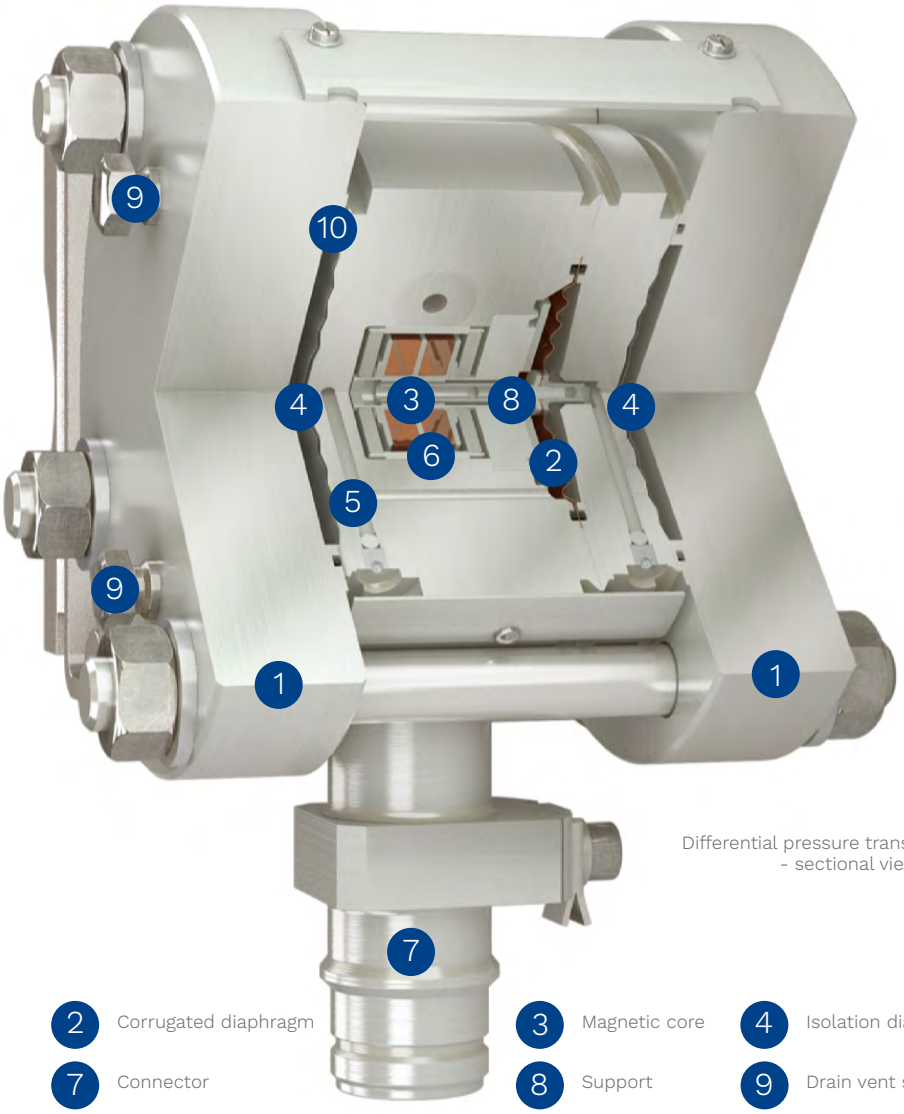

Differential pressure transmitter (BUL) - sectional view

1 Flanges
2 Corrugated diaphragm
3 Magnetic core
4 Isolation diaphragms
5 Filling fluid
6 Detector with inductors
7 Connector
8 Support
9 Drain vent screws
10 Seals

Customer benefits

Bibloc is a unique technology based on 50 years of experience designed specifically for nuclear applications and to withstand severe accident conditions.

Advantages of Bibloc technology

- Leading-edge performance:
  - Radiation – 2000 kGy (200 Mrad) TID Gamma radiation
  - Seismic – 10g ZPA seismic
  - Temperature – 170°C (338°F) steam/ temperature
  - Accuracy – 0,5% reference accuracy
- A 50-year feedback experience from Framatome on this technology and its operation, allowing us to ensure a 60-year life span.
- A safe and robust technology, for accurate and reliable measurements
- Specifically designed for severe accident conditions
- Simpler and safer maintenance because the electronics are housed in the electrical building rather than the reactor building.
- Reduced dose rate for workers during maintenance activities
- An optimized Total Cost of Ownership (TCO) compared to options from other sources.

Our promise to you

An optimized total cost of ownership (TCO) compared to options from other sources.

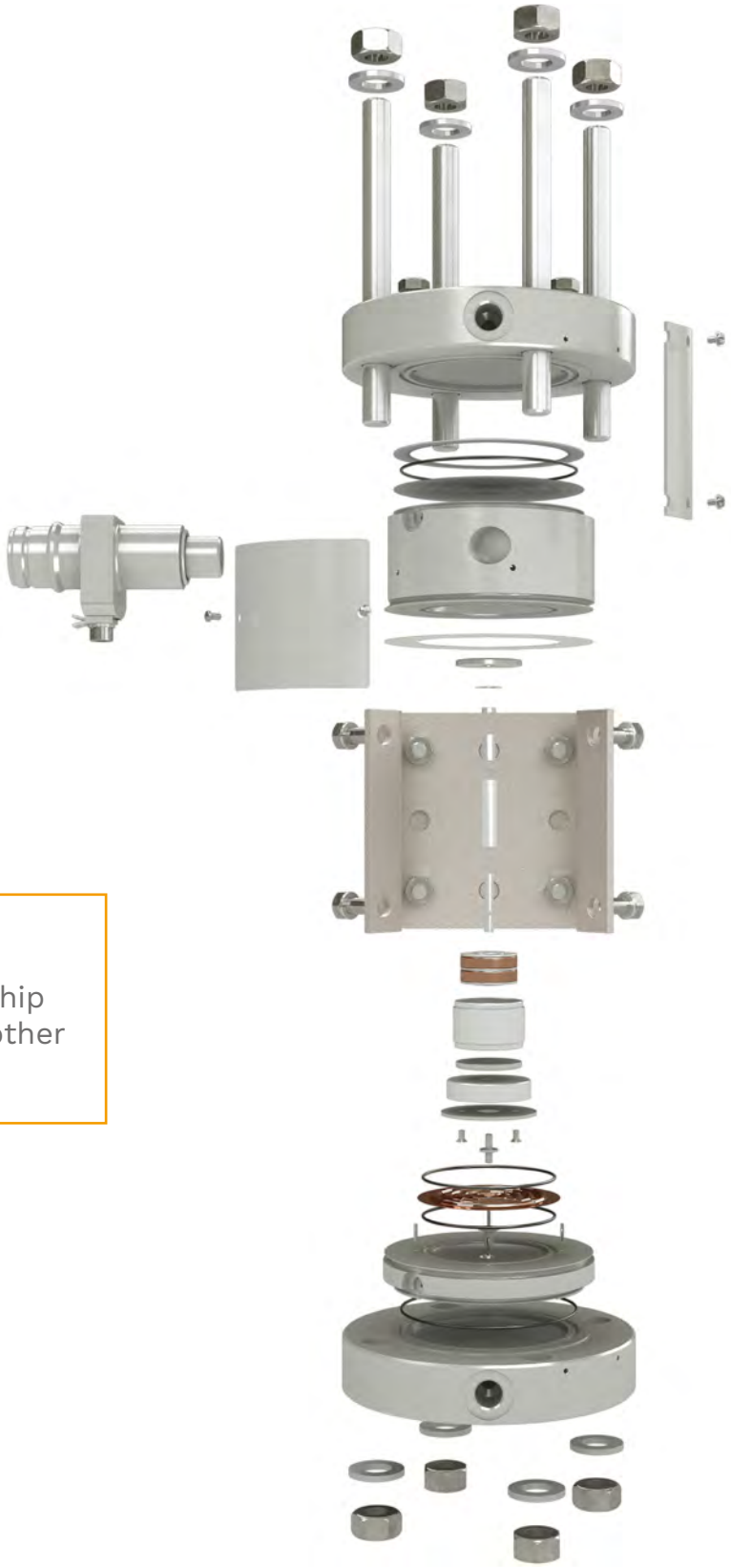

Differential pressure transmitter (BUL) - exploded view

Life span

A 60-year life span for Framatome Bibloc transmitters at 50°C against less than 10 years in the same conditions for other typical transmitters on the market.

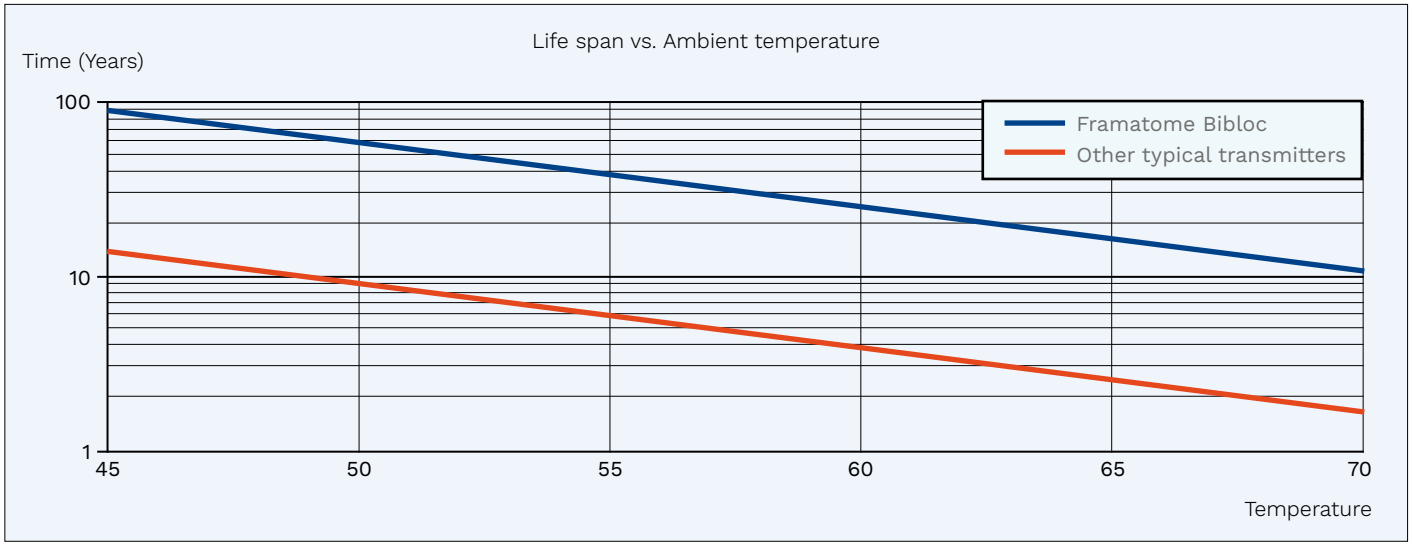

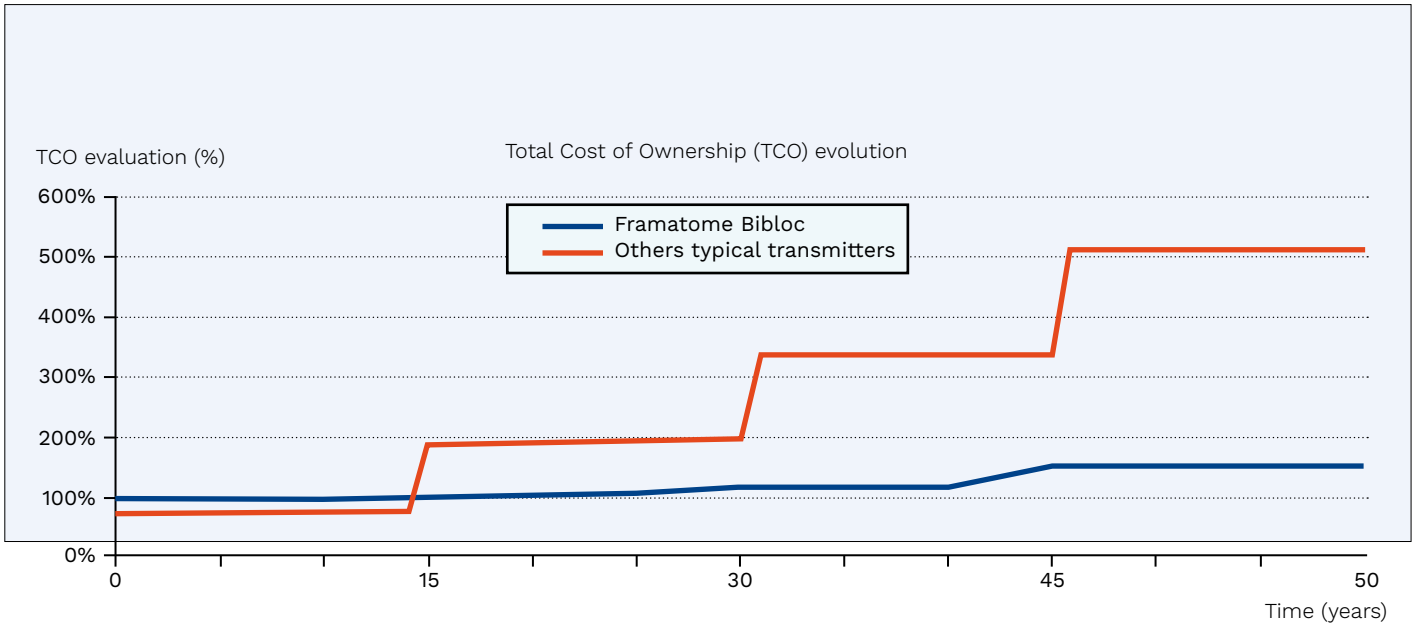

Nuclear qualification

Bibloc transmitters are fully compliant with most stringent nuclear standards and requirements.

Bibloc transmitters are designed and manufactured according to RCC-E revision 2012 and RCC-M revision 2005.

Bibloc transmitters are qualified to resist LOCA and severe accident conditions.

Qualification level	SA	K1	K2	K3 AD	K3
Radiation ageing	250 kGy	250 kGy	250 kGy	250 kGy	
Seismic	See seismic qualification figure				
Accidental radiation	600 kGy	600 kGy			
LOCA P&T profile		See LOCA/SA figures			
Severe Accident P&T profile	See LOCA/SA figures				
Post Accident		See LOCA/SA figures			

Seismic
All the parts of Bibloc transmitters (sensor, electronic including BUX converter and BUR rack, wiring) are qualified according to the following seismic spectrum.

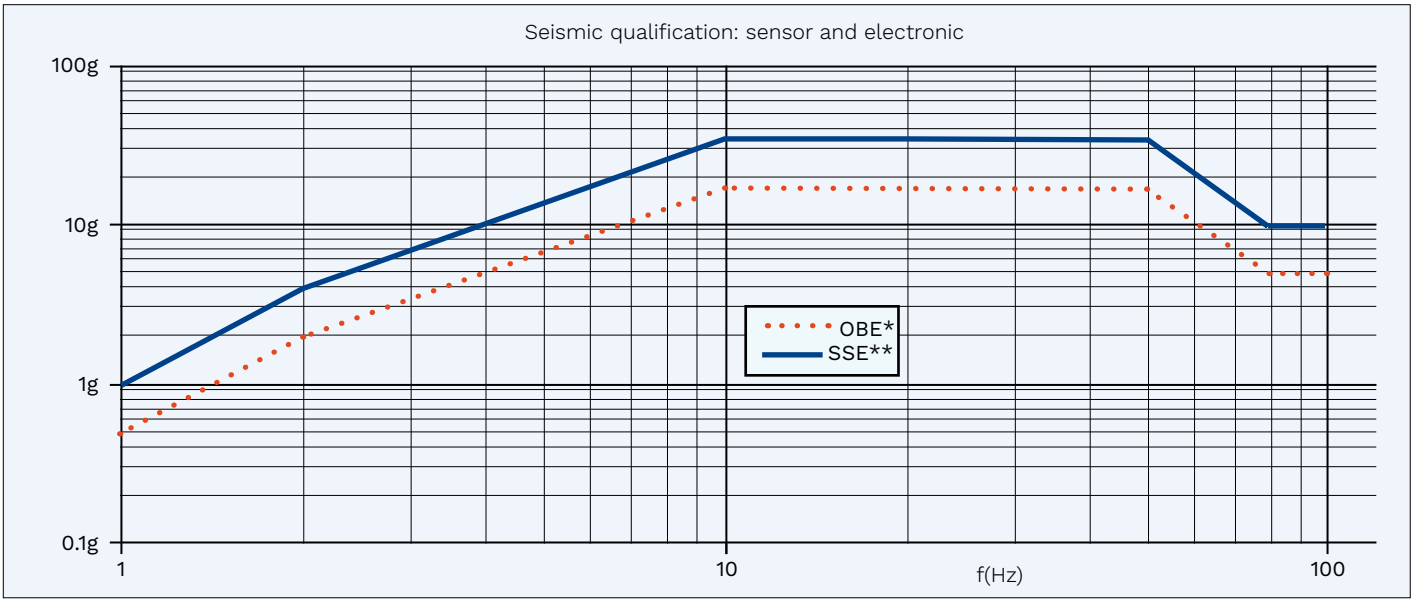

* OBE: Operating Basis Earthquake ** SSE: Safe Shutdown Earthquake

Radiation
Sensors are tested according to the following radiation level:

- Normal ageing radiation: 250kGy (tests performed at 70°C / 158°F)
- Accidental radiation: 600kGy (tests performed at 70°C / 158°F)

Thanks to complementary tests, Framatome can ensure that sensors resist to 2000kGy and the elementary components can resist up to 3000kGy, which cover mainly the severe accident project requirement for radiation.

Capillaries filled in water are qualified up to 2000kGy.

Capillaries filled in oil are qualified up to 80kGy.

The radiation rate dose used for the test is 1 kGy/h.
Each component of the sensor has been tested independently to analyze its behavior under radiation. TID for components alone is higher than 3000kGy when radiation dose greater than 50kGy/h.

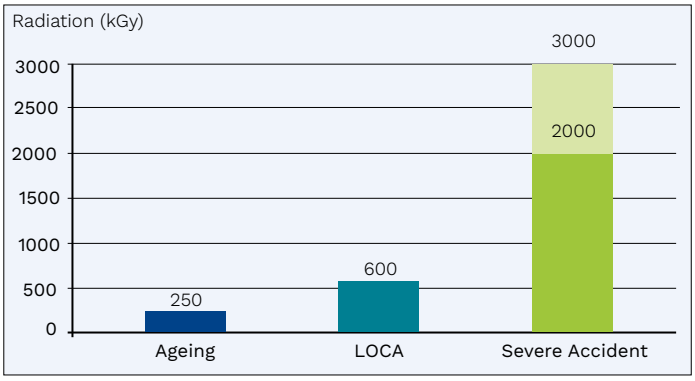

Accident conditions - Pressure and Temperature
Bibloc transmitters are qualified by 2 ways:

- During LOCA qualification, a 2-cycle Pressure and Temperature (P&T) method, has been applied imposing more constraint on the sensor and which consist in a first short P&T cycle with thermal shock (rise time pressure and temperature is lower than 25s) and a second cycle, described in the red curves below
- During Severe Accident qualification, 1 cycle P&T is applied. Profile is described in the blue curves below

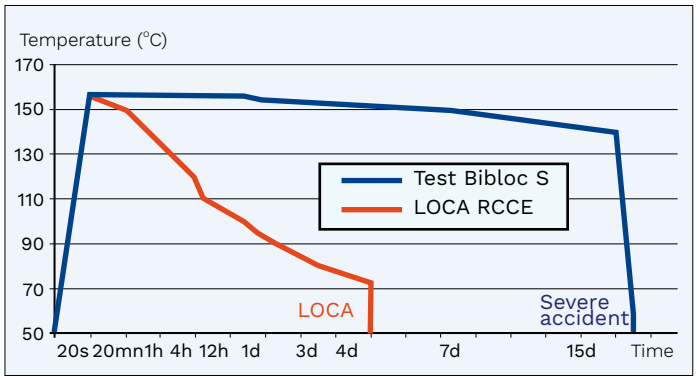

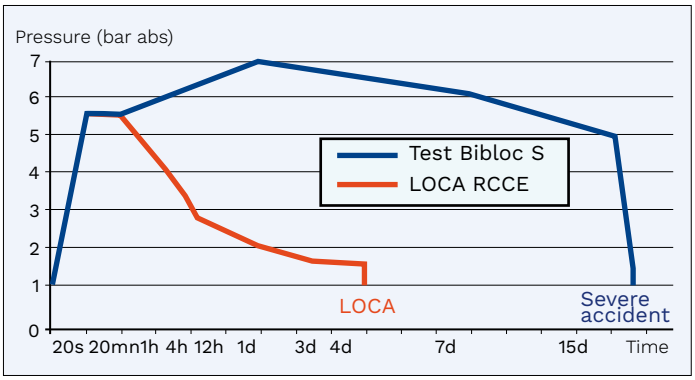

Standards
Bibloc pressure transmitters are qualified according to the following standards:

- IEC 60529 – protection degrees
- IEC 61000-4 series
  - IEC61000-4-1: Overview of IEC 61000-4 series
  - IEC61000-4-2: Electrostatic Discharge Immunity Testing
  - IEC61000-4-3: Radiated, radio-frequency, electromagnetic field immunity test
  - IEC61000-4-4: Electrical Fast Transient/Burst (EFT)
  - IEC61000-4-5: Surge Immunity
  - IEC61000-4-6: Immunity to conducted disturbances, induced by radio-frequency fields
  - IEC61000-4-8: Power frequency magnetic field immunity test
  - IEC61000-4-9: Pulse magnetic field immunity test
  - IEC61000-4-10: Damped oscillatory field immunity test
  - IEC61000-4-12: Oscillatory waves immunity test
  - IEC61000-4-16: Test for immunity to conducted common mode disturbances in the frequency range 0 Hz to 150 kHz immunity test
  - IEC61000-4-17: Ripple on d.c. input power port immunity test
  - IEC61000-4-18: Damped oscillatory wave immunity test
  - IEC61000-4-29: Voltage dips, short interruptions and voltage variations on d.c. input power ports
  - IEC61000-6-4: Emission standard for industrial environments
  - IEC61000-6-5: Generic standards - Immunity for equipment used in power station and substation environment
- IEC 60068: Model for Quality Assurance in Design, Development, Production, Installation and Servicing
- IEC 60721: Basic environmental testing procedures
- IEC 60300-1 : Dependability management

EMC
All the parts of Bibloc transmitters (sensor, electronic including BUX converter and BUR rack, wiring) are tested according to the IEC 61000-4 series.

Quality management
Bibloc pressure transmitters are compliant with:

- ISO 9001: Model for Quality Assurance in Design, Development, Production, Installation and Servicing
- ISO 9000-3: Quality management and quality assurance standards (Part 3: Guidelines for the application of ISO 9001 to the development, supply and maintenance of software)

BUX

Electronic converters are common to all transmitters and therefore interchangeable.

Description

BUX converter is an electronic module plugged in the BUR rack, which is common to all pressure transmitters.

The BUX converter comprises:

- A front face with captive attaching screws 1 handles and functional identification number label 2 and power indicator 3
- Zero 4 and scale 5 settings potentiometers
- A type D 15-pin female connector 6 for tests
- A pluggable transmitter customization board 7 which carries the thermal compensation and calibration tuning of the transmitter (same serial number as associated sensor)
- Protective fuse 8
- On the back panel, a calibration label, to be used with the JUS simulator, to record setting changes.

BUX modules are interchangeable, subject to refitting the transmitter's customization board, and setting the zero and scale potentiometers. For that there is no need to access the transmitter, but just using the JUS simulator and the indications of the calibration label.

BUX converter is powered with 24 to 48 VDC and delivers an electrical signal varying from 4 to 20 mA, proportional to the measured pressure.

The customization board carries passive components setting the compensation values for the transmitter's non-linearity, the influence of temperature on the transmitter, and setting the response time.

Electronic converter - BUX

Technical specifications

	Characteristics	Value
Power supply	DC Voltage, reference value	28 Vdc
	Nominal domain • Voltage value • Maximum influence • Maximum ripple	 [20 ; 52.8] V ± 0.005% / V 2 V p-p, with instantaneous minima limited to 20 V
	Limit domain • Voltage value • Operation aberrant if	 [-55 ; 55] V < 19.5 V
	Power supply current: maximum value (mA)	2500 / U power supply (V)
	Minimum capacitance necessary between power supply and ground	0.2 µF
	Power supply disturbances: maximum duration for influence < 0.25%	3 ms at 24 V, 100 ms at 48 V
Output current	Nominal domain	[4 ; 20] mA
	Limit domain • Minimum current • Maximum current • Typical current	 [2.1 ; 2.4] mA [24 ; 33] mA [2.25 ; 30] mA
	318Hz ripple	<0.1%
Load	Reference value	500 Ω
	Nominal domain • Value • Maximum influence • Tolerated capacitance	 [0 ; 1100] Ω ± 0.005 % / 50 Ω any
	Limit domain	[0 ; ∞]
Pre-heating time	Maximum value	5 minutes
	Typical value	1 minute
Influence of cables	Cable to be used	Balanced shielded twisted 3-conductor
	Reference length	150 m
	Nominal domain • Length • Maximum influence	[0 ; 300] m 0.15%/100 m on sensitivity 0.5%/100 m on zero, in % URL*
	Limit domain	Much longer than 300 m, not estimated
Minimum required cable insulation	Normal operation	10 MΩ
	Accidental operation	1 MΩ results in a maximum error of 0.2% (typical 0.1%) x G** 100 kΩ results in a maximum error of 2% (typical 1%) x G Below 100 kΩ, aberrant operation possible
Converter temperature	Reference value	23 ± 2°C
	Nominal domain • Value • Maximum influence	 [+5 ; +40] °C ±0.2 % / 10°C
	Limit domain	[-10 ; +70] °C
	Min. storage temperature	-25°C
Converter vibration	Nominal domain	[10 ; 500] Hz, amplitude 0.1 g
	Limit domain	[10 ; 500] Hz, amplitude 1 g
Dielectric	Dielectric strength	500 Vrms 50 Hz
	Insulation resistance	100 MΩ at 500 VDC

* URL : Upper Range Limit, **G = URL/Span, Span = Set measuring range

BULS

Differential pressure measurement to determine debit or water level.

Description
The BULS differential pressure transmitter comprises a measuring cell enclosed between two flanges which inner recess forms the measuring chamber. The sensitive element is a corrugated diaphragm carrying a magnetic core. The assembly is isolated from the measured fluid by two separating diaphragms and by a filling fluid.

The displacement of the magnetic core linked to the sensitive element is measured, without contact, by a detector comprising two inductors arranged outside the pressurized circuit.

Typical applications of BULS transmitter is the water level measurement of a steam generator.

Pressure range

Code	Minimum measuring range		Maximum measuring range		Zero offset		Nominal static pressure	
	bar	**kPa**	**bar**	**kPa**	**bar**	**kPa**	**bar**	**MPa**
BULSA	0.025	2.5	0.06	6	[-0.06 ; 0.043]	[-6 ; 4.3]	[0 ; 100]	[0 ; 10]
BULSB	0.06	6	0.12	12	[-0.12 ; 0.09]	[-12 ; 9]	[0 ; 200]	[0 ; 20]
BULSC	0.15	15	0.3	30	[-0.3 ; 0.22]	[-30 ; 22]	[0 ; 200]	[0 ; 20]
BULSD	0.3	30	0.6	60	[-0.6 ; 0.45]	[-60 ; 45]	[0 ; 200]	[0 ; 20]
BULSE	0.45	45	1.2*	120*	[-1.2 ; 0.9]	[-120 ; 90]	[0 ; 200]	[0 ; 20]
BULSF	1	100	3	300	[-3 ; 2.1]	[-300 ; 210]	[0 ; 200]	[0 ; 20]
BULSG	1.5	150	6	600	[-6 ; 4.5]	[-600 ; 450]	[0 ; 200]	[0 ; 20]
BULSH	3	300	12	1200	[-12 ; 9]	[-1200 ; 900]	[0 ; 200]	[0 ; 20]
BULSJ	7.5	750	30	3000	[-30 ; 22.5]	[-3000 ; 2250]	[0 ; 200]	[0 ; 20]

*On request, the maximum range could be extended to 1.5bar (150kPa)

Functional specifications
Radiation
Accuracy after exposure to total integrated dose of 250kGy or 600kGy gamma radiation are described hereunder.

Code	Total Integrated Dose (TID)		Accuracy
	kGy	**Mrad**	
BULSA	[0 ; 250]	[0 ; 25]	± (2.5% URL* + 0.5% Span*)
	[250 ; 850]	[25 ; 85]	± (2.5% URL + 0.5% Span)
BULSB	[0 ; 250]	[0 ; 25]	± (1% URL + 0.5% Span)
	[250 ; 850]	[25 ; 85]	± (1% URL + 0.5% Span)
BULSC to BULSJ	[0 ; 250]	[0 ; 25]	±(0.5% URL + 0.5% Span)
	[250 ; 850]	[25 ; 85]	±(0.5% URL + 0.5% Span)

*URL: Upper range limit ; *Span: Set measuring range

Seismic
Accuracy during and after a seismic disturbance of 35g.

Code	Accuracy
BULSA	± 2.5% URL
BULSB	± 1.25% URL
BULSC to BULSJ	± 0.5% URL

LOCA or SA
Accuracy during and after a LOCA/SA, during the post DBE operation.

Code	Accuracy
BULSA to BULSJ	± (3.5% URL + 2% Span)

BULA

Differential pressure measurement to determine debit or water level.

Description
The BULA differential pressure transmitter comprises a measuring cell enclosed between two flanges which inner recess forms the measuring chamber. The sensitive element is a corrugated diaphragm carrying a magnetic core. The assembly is isolated from the measured fluid by two separating diaphragms and by a filling fluid.

The displacement of the magnetic core linked to the sensitive element is measured, without contact, by a detector comprising two inductors arranged outside the pressurized circuit.

Typical applications of BULA transmitter is the water level measurement of a steam generator.

Pressure range

Code	Minimum measuring range		Maximum measuring range		Zero offset		Nominal static pressure	
	bar	**kPa**	**bar**	**kPa**	**bar**	**kPa**	**bar**	**MPa**
BULAA	0.025	2.5	0.06	6	[-0.06 ; 0.043]	[-6 ; 4.3]	[0 ; 100]	[0 ; 10]
BULAB	0.06	6	0.12	12	[-0.12 ; 0.09]	[-12 ; 9]	[0 ; 200]	[0 ; 20]
BULAC	0.15	15	0.3	30	[-0.3 ; 0.22]	[-30 ; 22]	[0 ; 200]	[0 ; 20]
BULAD	0.3	30	0.6	60	[-0.6 ; 0.45]	[-60 ; 45]	[0 ; 200]	[0 ; 20]
BULAE	0.45	45	1.2*	120*	[-1.2 ; 0.9]	[-120 ; 90]	[0 ; 200]	[0 ; 20]
BULAF	1	100	3	300	[-3 ; 2.1]	[-300 ; 210]	[0 ; 200]	[0 ; 20]
BULAG	1.5	150	6	600	[-6 ; 4.5]	[-600 ; 450]	[0 ; 200]	[0 ; 20]
BULAH	3	300	12	1200	[-12 ; 9]	[-1200 ; 900]	[0 ; 200]	[0 ; 20]
BULAJ	7.5	750	30	3000	[-30 ; 22.5]	[-3000 ; 2250]	[0 ; 200]	[0 ; 20]

*On request, the maximum range could be extended to 1.5bar (150kPa)

Functional specifications
Radiation
Accuracy after exposure to total integrated dose of 250kGy or 600kGy gamma radiation are described hereunder.

Code	Total Integrated Dose (TID)		Accuracy
	kGy	**Mrad**	
BULAA	[0 ; 250]	[0 ; 25]	± (2.5% URL* + 0.5% Span*)
	[250 ; 850]	[25 ; 85]	± (2.5% URL + 0.5% Span)
BULAB	[0 ; 250]	[0 ; 25]	± (1% URL + 0.5% Span)
	[250 ; 850]	[25 ; 85]	± (1% URL + 0.5% Span)
BULAC to BULAJ	[0 ; 250]	[0 ; 25]	±(0.5% URL + 0.5% Span)
	[250 ; 850]	[25 ; 85]	±(0.5% URL + 0.5% Span)

*URL: Upper range limit ; *Span: Set measuring range

Seismic
Accuracy during and after a seismic disturbance of 35g.

Code	Accuracy
BULAA	± 2.5% URL
BULAB	± 1.25% URL
BULAC to BULAJ	± 0.5% URL

LOCA or SA
Accuracy during and after a LOCA/SA, during the post DBE operation.

Code	Accuracy
BULAA to BULAJ	± (3.5% URL + 2% Span)

BULB

Differential pressure measurement to determine debit or water level.

Description

The BULB differential pressure transmitter comprises a measuring cell enclosed between two flanges which inner recess forms the measuring chamber. The sensitive element is a corrugated diaphragm carrying a magnetic core. The assembly is isolated from the measured fluid by two separating diaphragms and by a filling fluid.

The displacement of the magnetic core linked to the sensitive element is measured, without contact, by a detector comprising two inductors arranged outside the pressurized circuit.

Typical applications of BULB transmitter is the water level measurement of a steam generator.

Pressure range

Code	Minimum measuring range		Maximum measuring range		Zero offset		Nominal static pressure	
	bar	**kPa**	**bar**	**kPa**	**bar**	**kPa**	**bar**	**MPa**
BULBA	0.017	1.7	0.06	6	[-0.06 ; 0.043]	[-6 ; 4.3]	[0 ; 100]	[0 ; 10]
BULBB	0.03	3	0.12	12	[-0.12 ; 0.09]	[-12 ; 9]	[0 ; 200]	[0 ; 20]
BULBC	0.075	7.5	0.3	30	[-0.3 ; 0.22]	[-30 ; 22]	[0 ; 200]	[0 ; 20]
BULBD	0.15	15	0.6	60	[-0.6 ; 0.45]	[-60 ; 45]	[0 ; 200]	[0 ; 20]
BULBE	0.3	30	1.2*	120*	[-1.2 ; 0.9]	[-120 ; 90]	[0 ; 200]	[0 ; 20]
BULBF	0,9	90	3	300	[-3 ; 2.1]	[-300 ; 210]	[0 ; 200]	[0 ; 20]
BULBG	1.5	150	6	600	[-6 ; 4.5]	[-600 ; 450]	[0 ; 200]	[0 ; 20]
BULBH	3	300	12	1200	[-12 ; 9]	[-1200 ; 900]	[0 ; 200]	[0 ; 20]
BULBJ	7.5	750	30	3000	[-30 ; 22.5]	[-3000 ; 2250]	[0 ; 200]	[0 ; 20]

*On request, the maximum range could be extended to 1.5bar (150kPa)

Functional specifications

Radiation

Accuracy after exposure to total integrated dose of 250kGy or 600kGy gamma radiation are described hereunder.

Code	Total Integrated Dose (TID)		Accuracy
	kGy	**Mrad**	
BULBA	[0 ; 250]	[0 ; 25]	± (2.5% URL* + 0.5% Span*)
BULBB	[0 ; 250]	[0 ; 25]	± (1% URL + 0.5% Span)
BULBC to BULBJ	[0 ; 250]	[0 ; 25]	±(0.5% URL + 0.5% Span)

*URL: Upper range limit ; *Span: Set measuring range

Seismic

Accuracy during and after a seismic disturbance of 35g.

Code	Accuracy
BULBA	± 2.5% URL
BULBB	± 1.25% URL
BULBC to BULBJ	± 0.5% URL

BULC

Differential pressure measurement to determine debit or water level.

Description

The BULC differential pressure transmitter comprises a measuring cell enclosed between two flanges which inner recess forms the measuring chamber. The sensitive element is a corrugated diaphragm carrying a magnetic core. The assembly is isolated from the measured fluid by two separating diaphragms and by a filling fluid.

The displacement of the magnetic core linked to the sensitive element is measured, without contact, by a detector comprising two inductors arranged outside the pressurized circuit.

Typical applications of BULC transmitter is the water level measurement of a steam generator.

Pressure range

Code	Minimum measuring range		Maximum measuring range		Zero offset		Nominal static pressure	
	bar	**kPa**	**bar**	**kPa**	**bar**	**kPa**	**bar**	**MPa**
BULCA	0.017	1.7	0.06	6	[-0.06 ; 0.043]	[-6 ; 4.3]	[0 ; 100]	[0 ; 10]
BULCB	0.03	3	0.12	12	[-0.12 ; 0.09]	[-12 ; 9]	[0 ; 200]	[0 ; 20]
BULCC	0.075	7.5	0.3	30	[-0.3 ; 0.22]	[-30 ; 22]	[0 ; 200]	[0 ; 20]
BULCD	0.15	15	0.6	60	[-0.6 ; 0.45]	[-60 ; 45]	[0 ; 200]	[0 ; 20]
BULCE	0.3	30	1.2*	120*	[-1.2 ; 0.9]	[-120 ; 90]	[0 ; 200]	[0 ; 20]
BULCF	0,9	90	3	300	[-3 ; 2.1]	[-300 ; 210]	[0 ; 200]	[0 ; 20]
BULCG	1.5	150	6	600	[-6 ; 4.5]	[-600 ; 450]	[0 ; 200]	[0 ; 20]
BULCH	3	300	12	1200	[-12 ; 9]	[-1200 ; 900]	[0 ; 200]	[0 ; 20]
BULCJ	7.5	750	30	3000	[-30 ; 22.5]	[-3000 ; 2250]	[0 ; 200]	[0 ; 20]

*On request, the maximum range could be extended to 1.5bar (150kPa)

Seismic

Accuracy during and after a seismic disturbance of 35g.

Code	Accuracy
BULCA	± 2.5% URL
BULCB	± 1.25% URL
BULCC to BULCJ	± 0.5% URL

Differential pressure transmitter (BUL)
- exploded view

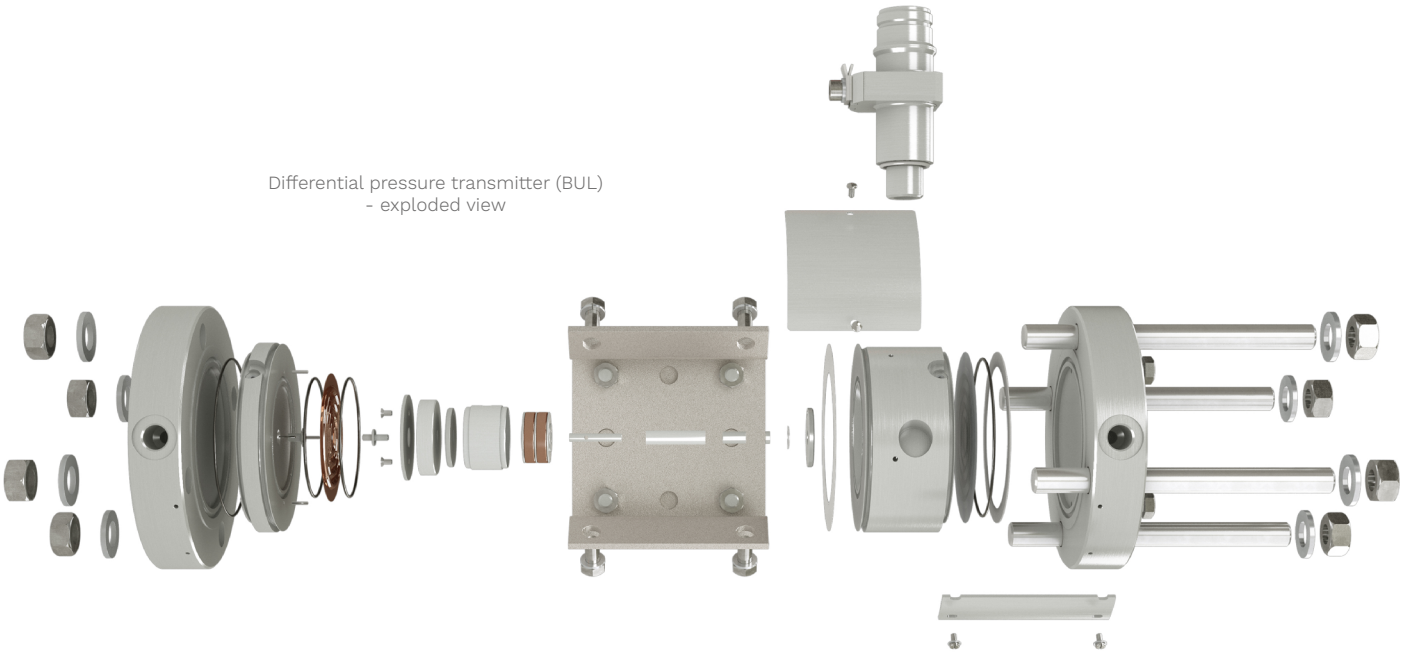

BULS specifications

Differential pressure measurement to determine debit or water level.

Performance specifications

We are able to forecast performance of our transmitters according to conditions. Performance changes if conditions change.

Table below gives performance with the following defined conditions :

- Radiation: normal = 250kGy, accident = 600kGy
- Temperature: normal = 50°C, severe accident peak = 156°C, post severe accident = 70°C
- P&T: see page 7

Code	Span* (bar)	URL* (bar)	PS* (bar)	K3	K3	K1, K2, K3	SA, K1, K2, K3	Response time at 95% (s)			
				Accuracy (% Span)							
				NC*	SC*	LC*	SA*	NC*	SC*	LC*	SA*
BULSA	0.03	0.06	10	-3.3 ± 1.3	-5.5 ± 3.3	-11.4 ± 6.4	-11.4 ± 6.4	<1.2			
BULSB	0.1	0.12	100	-0.6 ± 0.9	-1.2 ± 1.3	-6.1 ± 2.2	-6.1 ± 2.2				
BULSC	0.3	0.3	155	-2.5 ± 0.8	-2.9 ± 0.9	-7.5 ± 1.5	-7.5 ± 1.5				
BULSD	0.6	0.6	100	-0.8 ± 1	-1.1 ± 1.1	-5.7 ± 1.6	-5.7 ± 1.6				
BULSE	1	1.2	60	0 ± 0.9	-0.4 ± 1	-5.6 ± 1.6	-5.6 ± 1.6				
BULSF	2.1	3	60	0 ± 0.8	-0.4 ± 1	-6.3 ± 1.8	-6.3 ± 1.8				
BULSG	5.9	6	100	0 ± 0.8	-0.3 ± 0.9	-5 ± 1.5	-5 ± 1.5				
BULSH	10	12	50	0 ± 0.8	-0.3 ± 1	-5.5 ± 1.6	-5.5 ± 1.6				
BULSJ	30	30	80	0 ± 0.8	-0.3 ± 0.9	-4.9 ± 1.5	-4.9 ± 1.5				

*URL : Upper range limit; *Span : Set measuring range *PS : Service pressure
*NC: Normal conditions; *SC: Seismic conditions; *LC: LOCA conditions; *SA: Severe accident conditions

Physical specifications

Characteristics		
Weight		9 kg
Fluid connections		2 holes ¼" NPT tapped
Mounting		Mounting on Ø60mm maximum horizontal or vertical tube or rack mounting or plate mounting
Electrical connections	Socket (Souriau)	8NA 1Y 12-12 PN00 SA02 (3 wired contacts)
	Plug	8.341.5310
	Seal	EPR and Helicoflex
	Connector with mobile part	8NA 66G 12-12 PSN0
Materials of construction	Flanges 1 (see page 3)	Stainless steel
	Corrugated diaphragm 2 (see page 3)	Copper Berylium or stainless steel
	Magnetic core 3 (see page 3)	FeNi 50
	Isolation diaphragms 4 (see page 3)	Stainless steel
	Filing fluid 5 (see page 3)	Nuclear or Silicone oil
	Detector with two inductors 6 (see page 3)	Copper
	Connector 7 (see page 3)	Stainless steel
	Support 8 (see page 3)	Stainless steel
	Drain vent screws 9 (see page 3)	Stainless steel
	Seals 10 (see page 3)	Ethylene-Propylene


6000
REGLEE / CAL SPAN
NUCLEAIRE / NUCLEAR
54218

BUMS / BUNS

Differential pressure measurement to determine water level of pressurizer or reactor vessel.

Description

BUMS differential pressure transmitter comprises a differential pressure transmitter (BULS) whose flange (LP or HP) is replaced by a flange equipped with a capillary tube and a diaphragm seal (1 sealed column transmitter).

Typical application of BUMS transmitter is the water level measurement of pressurizer.

BUNS differential pressure transmitter comprises a differential pressure transmitter (BULS) whose HP and LP flanges are replaced by two flanges equipped with capillary tubes and two HP and LP separators (2 sealed columns transmitter).

Typical application of BUNS transmitter is the water level measurement of reactor vessel.

Pressure range

Code	Minimum measuring range		Maximum measuring range		Zero offset		Nominal static pressure	
	bar	**kPa**	**bar**	**kPa**	**bar**	**kPa**	**bar**	**MPa**
BUMSA / BUNSA	0.025	2.5	0.06	6	[-0.06 ; 0.043]	[-6 ; 4.3]	[0 ; 100]	[0 ; 10]
BUMSB / BUNSB	0.06	6	0.12	12	[-0.12 ; 0.09]	[-12 ; 9]	[0 ; 200]	[0 ; 20]
BUMSC / BUNSC	0.15	15	0.3	30	[-0.3 ; 0.22]	[-30 ; 22]	[0 ; 200]	[0 ; 20]
BUMSD / BUNSD	0.3	30	0.6	60	[-0.6 ; 0.45]	[-60 ; 45]	[0 ; 200]	[0 ; 20]
BUMSE / BUNSE	0.45	45	1.2*	120*	[-1.2 ; 0.9]	[-120 ; 90]	[0 ; 200]	[0 ; 20]
BUMSF / BUNSF	1	100	3	300	[-3 ; 2.1]	[-300 ; 210]	[0 ; 200]	[0 ; 20]
BUMSG / BUNSG	1.5	150	6	600	[-6 ; 4.5]	[-600 ; 450]	[0 ; 200]	[0 ; 20]
BUMSH / BUNSH	3	300	12	1200	[-12 ; 9]	[-1200 ; 900]	[0 ; 200]	[0 ; 20]

*On request, the maximum range could be extended to 1.5bar (150kPa)

Functional specifications

Radiation

Accuracy during and after exposure to the following Total Integrated Dose (TID) of gamma radiation.
Influence of capillaries have to be added.

Code	Total Integrated Dose (TID)		Accuracy
	kGy	**Mrad**	
BUMSA / BUNSA	[0 ; 250]	[0 ; 25]	± (2.5% URL* + 0.5% Span*)
	[250 ; 850]	[25 ; 85]	± (2.5% URL + 0.5% Span)
BUMSB / BUNSB	[0 ; 250]	[0 ; 25]	± (1% URL + 0.5% Span)
	[250 ; 850]	[25 ; 85]	± (1% URL + 0.5% Span)
BUMSC to BUMSH / BUNSC to BUNSH	[0 ; 250]	[0 ; 25]	±(0.5% URL + 0.5% Span)
	[250 ; 850]	[25 ; 85]	±(0.5% URL + 0.5% Span)

*URL : Upper range limit; *Span : Set measuring range

Seismic

Accuracy during and after a seismic disturbance of 35g.
Influence of capillaries have to be added.

Code	Accuracy
BUMSA / BUNSA	± 2.5% URL
BUMSB / BUNSB	± 1.25% URL
BUMSC to BUMSH / BUNSC to BUNSH	± 0.5% URL

LOCA

Accuracy during and after a LOCA and during the post DBE operation. Influence of capillaries have to be added.

Code	Accuracy
BUMSA to BUMSH	± (3.5% URL + 2% Span)
BUNSA to BUNSH	± (3.5% URL + 2% Span)

BUMA / BUNA

Differential pressure measurement to determine water level of pressurizer or reactor vessel.

Description

BUMA differential pressure transmitter comprises a differential pressure transmitter (BULA) whose flange (LP or HP) is replaced by a flange equipped with a capillary tube and a diaphragm seal (1 sealed column transmitter).

Typical application of BUMA transmitter is the water level measurement of pressurizer.

BUNS differential pressure transmitter comprises a differential pressure transmitter (BULA) whose HP and LP flanges are replaced by two flanges equipped with capillary tubes and two HP and LP separators (2 sealed columns transmitter).

Typical application of BUNA transmitter is the water level measurement of reactor vessel.

Pressure range

Code	Minimum measuring range		Maximum measuring range		Zero offset		Nominal static pressure	
	bar	**kPa**	**bar**	**kPa**	**bar**	**kPa**	**bar**	**MPa**
BUMAA / BUNAA	0.025	2.5	0.06	6	[-0.06 ; 0.043]	[-6 ; 4.3]	[0 ; 100]	[0 ; 10]
BUMAB / BUNAB	0.06	6	0.12	12	[-0.12 ; 0.09]	[-12 ; 9]	[0 ; 200]	[0 ; 20]
BUMAC / BUNAC	0.15	15	0.3	30	[-0.3 ; 0.22]	[-30 ; 22]	[0 ; 200]	[0 ; 20]
BUMAD / BUNAD	0.3	30	0.6	60	[-0.6 ; 0.45]	[-60 ; 45]	[0 ; 200]	[0 ; 20]
BUMAE / BUNAE	0.45	45	1.2*	120*	[-1.2 ; 0.9]	[-120 ; 90]	[0 ; 200]	[0 ; 20]
BUMAF / BUNAF	1	100	3	300	[-3 ; 2.1]	[-300 ; 210]	[0 ; 200]	[0 ; 20]
BUMAG / BUNAG	1.5	150	6	600	[-6 ; 4.5]	[-600 ; 450]	[0 ; 200]	[0 ; 20]
BUMAH / BUNAH	3	300	12	1200	[-12 ; 9]	[-1200 ; 900]	[0 ; 200]	[0 ; 20]

*On request, the maximum range could be extended to 1.5bar (150kPa)

Functional specifications

Radiation

Accuracy during and after exposure to the following Total Integrated Dose (TID) of gamma radiation.
Influence of capillaries have to be added.

Code	Total Integrated Dose (TID)		Accuracy
	kGy	**Mrad**	
BUMAA / BUNAA	[0 ; 250]	[0 ; 25]	± (2.5% URL* + 0.5% Span*)
	[250 ; 850]	[25 ; 85]	± (2.5% URL + 0.5% Span)
BUMAB / BUNAB	[0 ; 250]	[0 ; 25]	± (1% URL + 0.5% Span)
	[250 ; 850]	[25 ; 85]	± (1% URL + 0.5% Span)
BUMAC to BUMAH / BUNAC to BUNAH	[0 ; 250]	[0 ; 25]	±(0.5% URL + 0.5% Span)
	[250 ; 850]	[25 ; 85]	±(0.5% URL + 0.5% Span)

*URL : Upper range limit; *Span : Set measuring range

Seismic

Accuracy during and after a seismic disturbance of 35g.
Influence of capillaries have to be added.

Code	Accuracy
BUMAA / BUNAA	± 2.5% URL
BUMAB / BUNAB	± 1.25% URL
BUMAC to BUMAH / BUNAC to BUNAH	± 0.5% URL

LOCA

Accuracy during and after a LOCA and during the post DBE operation. Influence of capillaries have to be added.

Code	Accuracy
BUMSA to BUMSH	± (3.5% URL + 2% Span)
BUNSA to BUNSH	± (3.5% URL + 2% Span)

BUMB / BUNB

Differential pressure measurement to determine water level of pressurizer or reactor vessel.

Description

BUMB differential pressure transmitter comprises a differential pressure transmitter (BULB) whose flange (LP or HP) is replaced by a flange equipped with a capillary tube and a diaphragm seal (1 sealed column transmitter).

Typical application of BUMB transmitter is the water level measurement of pressurizer.

BUNB differential pressure transmitter comprises a differential pressure transmitter (BULB) whose HP and LP flanges are replaced by two flanges equipped with capillary tubes and two HP and LP separators (2 sealed columns transmitter).

Typical application of BUNB transmitter is the water level measurement of reactor vessel.

Pressure range

Code	Minimum measuring range		Maximum measuring range		Zero offset		Nominal static pressure	
	bar	**kPa**	**bar**	**kPa**	**bar**	**kPa**	**bar**	**MPa**
BUMBA / BUNBA	0.017	1.7	0.06	6	[-0.06 ; 0.043]	[-6 ; 4.3]	[0 ; 100]	[0 ; 10]
BUMBB / BUNBB	0.03	3	0.12	12	[-0.12 ; 0.09]	[-12 ; 9]	[0 ; 200]	[0 ; 20]
BUMBC / BUNBC	0.075	7.5	0.3	30	[-0.3 ; 0.22]	[-30 ; 22]	[0 ; 200]	[0 ; 20]
BUMBD / BUNBD	0.15	15	0.6	60	[-0.6 ; 0.45]	[-60 ; 45]	[0 ; 200]	[0 ; 20]
BUMBE / BUNBE	0.3	30	1.2*	120*	[-1.2 ; 0.9]	[-120 ; 90]	[0 ; 200]	[0 ; 20]
BUMBF / BUNBF	0,9	90	3	300	[-3 ; 2.1]	[-300 ; 210]	[0 ; 200]	[0 ; 20]
BUMBG / BUNBG	1.5	150	6	600	[-6 ; 4.5]	[-600 ; 450]	[0 ; 200]	[0 ; 20]
BUMBH / BUNBH	3	300	12	1200	[-12 ; 9]	[-1200 ; 900]	[0 ; 200]	[0 ; 20]

*On request, the maximum range could be extended to 1.5bar (150kPa)

Functional specifications

Radiation

Accuracy during and after exposure to the following Total Integrated Dose (TID) of gamma radiation.
Influence of capillaries have to be added.

Code	Total Integrated Dose (TID)		Accuracy
	kGy	**Mrad**	
BUMBA / BUNBA	[0 ; 250]	[0 ; 25]	± (2.5% URL* + 0.5% Span*)
BUMBB / BUNBB	[0 ; 250]	[0 ; 25]	± (1% URL + 0.5% Span)
BUMBC to BUMBH / BUNBC to BUNBH	[0 ; 250]	[0 ; 25]	±(0.5% URL + 0.5% Span)

*URL : Upper range limit; *Span : Set measuring range

Seismic

Accuracy during and after a seismic disturbance of 35g.
Influence of capillaries have to be added.

Code	Accuracy
BUMBA / BUNBA	± 2.5% URL
BUMBB / BUNBB	± 1.25% URL
BUMBC to BUMBH / BUNBC to BUNBH	± 0.5% URL

BUMC / BUNC

Differential pressure measurement to determine water level of pressurizer or reactor vessel.

Description

BUMC differential pressure transmitter comprises a differential pressure transmitter (BULC) whose flange (LP or HP) is replaced by a flange equipped with a capillary tube and a diaphragm seal (1 sealed column transmitter).

Typical application of BUMC transmitter is the water level measurement of pressurizer.

BUNC differential pressure transmitter comprises a differential pressure transmitter (BULC) whose HP and LP flanges are replaced by two flanges equipped with capillary tubes and two HP and LP separators (2 sealed columns transmitter).

Typical application of BUNC transmitter is the water level measurement of reactor vessel.

Pressure range

Code	Minimum measuring range		Maximum measuring range		Zero offset		Nominal static pressure	
	bar	**kPa**	**bar**	**kPa**	**bar**	**kPa**	**bar**	**MPa**
BUMCA / BUNCA	0.017	1.7	0.06	6	[-0.06 ; 0.043]	[-6 ; 4.3]	[0 ; 100]	[0 ; 10]
BUMCB / BUNCB	0.03	3	0.12	12	[-0.12 ; 0.09]	[-12 ; 9]	[0 ; 200]	[0 ; 20]
BUMCC / BUNCC	0.075	7.5	0.3	30	[-0.3 ; 0.22]	[-30 ; 22]	[0 ; 200]	[0 ; 20]
BUMCD / BUNCD	0.15	15	0.6	60	[-0.6 ; 0.45]	[-60 ; 45]	[0 ; 200]	[0 ; 20]
BUMCE / BUNCE	0.3	30	1.2*	120*	[-1.2 ; 0.9]	[-120 ; 90]	[0 ; 200]	[0 ; 20]
BUMCF / BUNCF	0,9	90	3	300	[-3 ; 2.1]	[-300 ; 210]	[0 ; 200]	[0 ; 20]
BUMCG / BUNCG	1.5	150	6	600	[-6 ; 4.5]	[-600 ; 450]	[0 ; 200]	[0 ; 20]
BUMCH / BUNCH	3	300	12	1200	[-12 ; 9]	[-1200 ; 900]	[0 ; 200]	[0 ; 20]

*On request, the maximum range could be extended to 1.5bar (150kPa)

Seismic

Accuracy during and after a seismic disturbance of 35g.
Influence of capillaries have to be added.

Code	Accuracy
BUMCA / BUNCA	± 2.5% URL
BUMCB / BUNCB	± 1.25% URL
BUMCC to BUMCH / BUNCC to BUNCH	± 0.5% URL

BUN: BUL (differential pressure transmitter) and two HP and LP separators (2 sealed columns transmitter).

BUMS / BUNS

Differential pressure measurement to determine water level of pressurizer or reactor vessel.

Performance specifications

We are able to forecast performance of our transmitters according to conditions. Performance changes if conditions change.

Table below gives performance with the following defined conditions:

- Radiation: normal = 250kGy, accident = 600kGy
- Temperature: normal = 50°C, severe accident peak = 156°C, post severe accident = 70°C
- P&T: see page 7

Code	Span* (bar)	URL* (bar)	PS* (bar)	Accuracy (% Span)				Response time at 95% (s)			
				NC*	SC*	LC*	SA*	NC*	SC*	LC*	SA*
BUMSE	0.44	1.2	155	-0.4 ± 0.9	-1.3 ± 1.5	-10.8 ± 2.6	-10.8 ± 2.6	<2.4 (1) (3)			
BUNSE	1.5	1.2	155	0 ± 0.8	-0.3 ± 0.9	-4.3 ± 1.4	-4.3 ± 1.4	<18 (2) (3)			
BUNSE	1.1	1.5	155	-0.1 ± 0.8	-0.5 ± 1	-6 ± 1.7	-6 ± 1.7	<18 (2) (3)			
BUNSG	4.1	6	155	0 ± 0.8	-0.5 ± 1	-6.4 ± 1.8	-6.4 ± 1.8	<18 (2) (3)			

(1) 1 x 14m capillery filled with water
(2) 2 x 25m capillery filled with water
(3) Response time depends on configuration (length, filling fluid)

*NC: Normal conditions; *SC: Seismic conditions; *LC: LOCA conditions; *SA: Severe accident conditions
*URL : Upper range limit; *Span : Set measuring range, *PS : Service pressure

Physical specifications

Characteristics		
Weight		9 kg (sensor alone, without sealed systems)
Mounting		Mounting on Ø60mm maximum horizontal or vertical tube or rack mounting or plate mounting
Fluid connections	Sensor (BUM)	1 x M20 (capillary) + 1 x ¼" NPT f (process)
	Sensor (BUN)	2 x M20 (capillary)
	Diaphragm sealed (BUM / BUN)	1 x M20 (capillary) + 1 x ¼" NPT f (process)
Electrical connections	Socket (Souriau)	8NA 1Y 12-12 PN00 SA02 (3 wired contacts)
	Plug	8.341.5310
	Seal	EPR and Helicoflex
	Connector with mobile part	8NA 66G 12-12 PSN0
Materials of construction	Flanges 1	Stainless steel
	Capillary tube 2	Stainless steel
	Diaphragm seal 3	Stainless steel

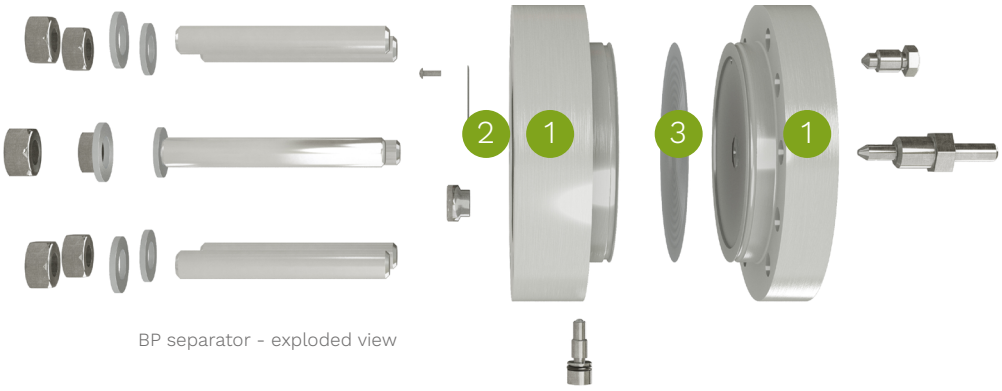

BP separator - exploded view


L200429-2

BUFS

Absolute pressure measurement to control pressure in the containment.

Description
BUFS absolute pressure transmitter comprises a measuring cell mounted in a sealed envelope filled with oil. The envelope comprises a hollow body closed by a plate and a bellows for expansion of the oil as temperature rises. The pressure to be measured is transmitted by the bellows and the oil to the measuring cell.

This cell comprises an aneroid capsule which moves the magnetic core. The core displacement is measured without contact by a detector comprising two inductors. Typical application of BUFS transmitter is the pressure control in the containment.

Pressure range

Code	Minimum measuring range		Maximum measuring range		Zero offset		Trial pressure	
	bar abs	**kPa abs**	**bar abs**	**kPa abs**	**bar abs**	**kPa abs**	**bar abs**	**MPa abs**
BUFST	3	300	6	600	[0 ; 3]	[0 ; 300]	10	1

Functional specifications
Radiation
Accuracy during and after exposure to the following Total Integrated Dose (TID) of gamma radiation.

Code	Total Integrated Dose (TID)		Accuracy
	kGy	Mrad	
BUFST	[0 ; 250]	[0 ; 25]	±(0.5% URL + 0.5% Span)
	[250 ; 850]	[25 ; 85]	±(0.5% URL + 0.5% Span)

Seismic
Accuracy during and after a seismic disturbance of 35g.

Code	Accuracy
BUFST	± 0.5% URL

LOCA
Accuracy during and after a LOCA and during the post DBE operation.

Code	Accuracy
BUFST	± (2% URL + 0.5% Span)

Performance specifications
We are able to forecast performance of our transmitters according to conditions. Performance changes if conditions change.

Table below gives performance with the following defined conditions:

- Radiation: normal = 250kGy, accident = 600kGy
- Temperature: normal = 50°C, severe accident peak = 156°C, post severe accident = 70°C
- P&T: see page 7

Code	Span* (bar)	URL* (bar)	Accuracy (% span)				Response time at 95% (s)			
			NC*	SC*	LC*	SA*	NC*	SC*	LC*	SA*
BUFST	6	6	0 ± 0.8	-1.2 ± 1.6	2.2 ± 1.4	2.2 ± 1.4	<0.75			

*NC: Normal conditions; *SC: Seismic conditions; *LC: LOCA conditions; *SA: Severe accident conditions
*RL : Upper range limit; *Span : Set measuring range

BUFA

Absolute pressure measurement to control pressure in the containment.

Description
BUFA absolute pressure transmitter comprises a measuring cell mounted in a sealed envelope filled with oil. The envelope comprises a hollow body closed by a plate and a bellows for expansion of the oil as temperature rises. The pressure to be measured is transmitted by the bellows and the oil to the measuring cell.

This cell comprises an aneroid capsule which moves the magnetic core. The core displacement is measured without contact by a detector comprising two inductors. Typical application of BUFA transmitter is the pressure control in the containment.

Pressure range

Code	Minimum measuring range		Maximum measuring range		Zero offset		Trial pressure	
	bar abs	**kPa abs**	**bar abs**	**kPa abs**	**bar abs**	**kPa abs**	**bar abs**	**MPa abs**
BUFAT	3	300	6	600	[0 ; 3]	[0 ; 300]	10	1

Functional specifications
Radiation
Accuracy during and after exposure to the following Total Integrated Dose (TID) of gamma radiation.

Code	Total Integrated Dose (TID)		Accuracy
	kGy	**Mrad**	
BUFAT	[0 ; 250]	[0 ; 25]	±(0.5% URL + 0.5% Span)
	[250 ; 850]	[25 ; 85]	±(0.5% URL + 0.5% Span)

Seismic
Accuracy during and after a seismic disturbance of 35g.

Code	Accuracy
BUFAT	± 0.5% URL

LOCA
Accuracy during and after a LOCA and during the post DBE operation.

Code	Accuracy
BUFAT	± (2% URL + 0.5% Span)

Performance specifications
We are able to forecast performance of our transmitters according to conditions. Performance changes if conditions change.

Table below gives performance with the following defined conditions:

- Radiation: normal = 250kGy, accident = 600kGy
- Temperature: normal = 50°C, severe accident peak = 156°C, post severe accident = 70°C
- P&T: see page 7

Code	Span* (bar)	URL* (bar)	Accuracy (% span)				Response time at 95% (s)			
			NC*	**SC***	**LC***	**SA***	**NC***	**SC***	**LC***	**SA***
BUFAT	6	6	0 ± 0.8	-1.2 ± 1.6	2.2 ± 1.4	2.2 ± 1.4	<0.75			

*NC: Normal conditions; *SC: Seismic conditions; *LC: LOCA conditions; *SA: Severe accident conditions
*RL : Upper range limit; *Span : Set measuring range

BUFB

Absolute pressure measurement to control pressure in the containment.

Description
BUFB absolute pressure transmitter comprises a measuring cell mounted in a sealed envelope filled with oil. The envelope comprises a hollow body closed by a plate and a bellows for expansion of the oil as temperature rises. The pressure to be measured is transmitted by the bellows and the oil to the measuring cell.

This cell comprises an aneroid capsule which moves the magnetic core. The core displacement is measured without contact by a detector comprising two inductors. Typical application of BUFB transmitter is the pressure control in the containment.

Pressure range

Code	Minimum measuring range		Maximum measuring range		Zero offset		Trial pressure	
	bar abs	**kPa abs**	**bar abs**	**kPa abs**	**bar abs**	**kPa abs**	**bar abs**	**MPa abs**
BUFBT	3	300	6	600	[0 ; 3]	[0 ; 300]	10	1

Functional specifications
Radiation
Accuracy during and after exposure to the following Total Integrated Dose (TID) of gamma radiation.

Code	Total Integrated Dose (TID)		Accuracy
	kGy	**Mrad**	
BUFBT	[0 ; 250]	[0 ; 25]	±(0.5% URL + 0.5% Span)

Seismic
Accuracy during and after a seismic disturbance of 35g.

Code	Accuracy
BUFBT	± 0.5% URL

Performance specifications
We are able to forecast performance of our transmitters according to conditions. Performance changes if conditions change.

Table below gives performance with the following defined conditions:

- Radiation: normal = 250kGy
- Temperature : normal = 50°C

Code	Span* (bar)	URL* (bar)	Accuracy (% span)		Response time at 95% (s)	
			NC*	**SC***	**NC***	**SC***
BUFBT	6	6	0 ± 0.8	-1.2 ± 1.6	<0.75	

*NC: Normal conditions; *SC: Seismic conditions;
*URL : Upper range limit; *Span : Set measuring range

BUFC

Absolute pressure measurement to control pressure in the containment.

Description
BUFC absolute pressure transmitter comprises a measuring cell mounted in a sealed envelope filled with oil. The envelope comprises a hollow body closed by a plate and a bellows for expansion of the oil as temperature rises. The pressure to be measured is transmitted by the bellows and the oil to the measuring cell.

This cell comprises an aneroid capsule which moves the magnetic core. The core displacement is measured without contact by a detector comprising two inductors. Typical application of BUFC transmitter is the pressure control in the containment.

Pressure range

Code	Minimum measuring range		Maximum measuring range		Zero offset		Trial pressure	
	bar abs	**kPa abs**	**bar abs**	**kPa abs**	**bar abs**	**kPa abs**	**bar abs**	**MPa abs**
BUFCT	3	300	6	600	[0 ; 3]	[0 ; 300]	10	1

Seismic
Accuracy during and after a seismic disturbance of 35g.

Code	Accuracy
BUFCT	± 0.5% URL

Performance specifications
We are able to forecast performance of our transmitters according to conditions. Performance changes if conditions change.

Table below gives performance with the following defined conditions:
- Temperature : normal = 50°C

Code	Span* (bar)	URL* (bar)	Accuracy (% span)		Response time at 95% (s)	
			NC*	**SC***	**NC***	**SC***
BUFCT	6	6	0 ± 0.8	-1.2 ± 1.6	<0.75	

*NC: Normal conditions; *SC: Seismic conditions; *LC: LOCA conditions; *SA: Severe accident conditions
*RL : Upper range limit; *Span : Set measuring range

BUFS specifications

Absolute pressure measurement to control pressure in the containment.

Physical specifications

Characteristics		
Weight		12 kg
Fluid connections		1 ¼” NPT coupling for tube
Mounting		Mounting Ø60mm maximum horizontal or vertical tube or mounting rack or mounting plate
Electrical connections	Socket (Souriau)	8NA 1Y 12-12 PN00 SA02 (3 wired contacts)
	Plug	8.341.5310
	Seal	EPR and Helicoflex
	Connector with mobile part	8NA 66G 12-12 PSN0
Materials of construction	Hollow body 1	Stainless steel
	Plate 2	Stainless steel
	Bellows 3	Stainless steel
	Aneroid capsule 4	Stainless steel
	Magnetic core 5	FeNi 50
	Inductors 6	Copper
	Connector 7	Stainless steel
	Ground terminal 8	Stainless steel

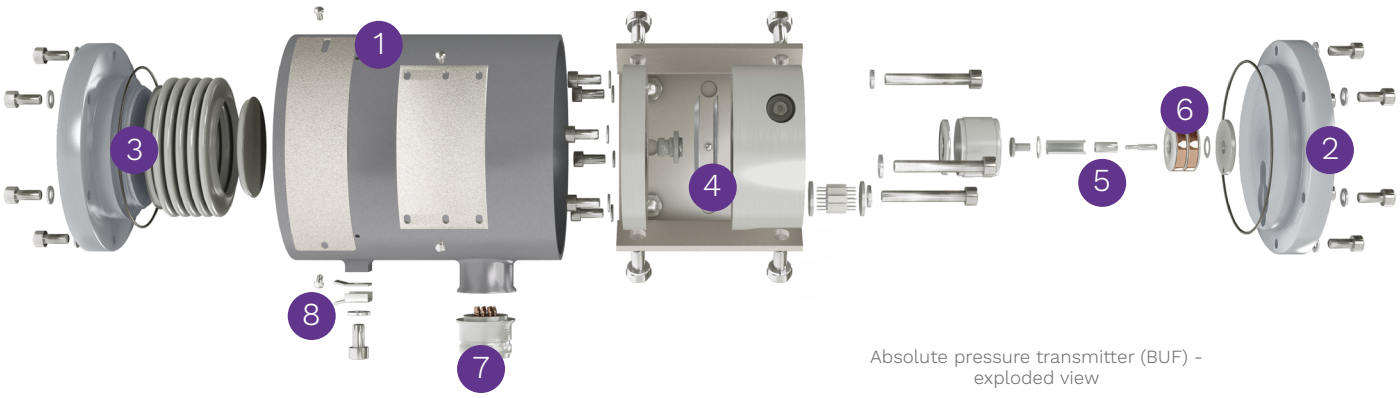

Absolute pressure transmitter (BUF) - exploded view

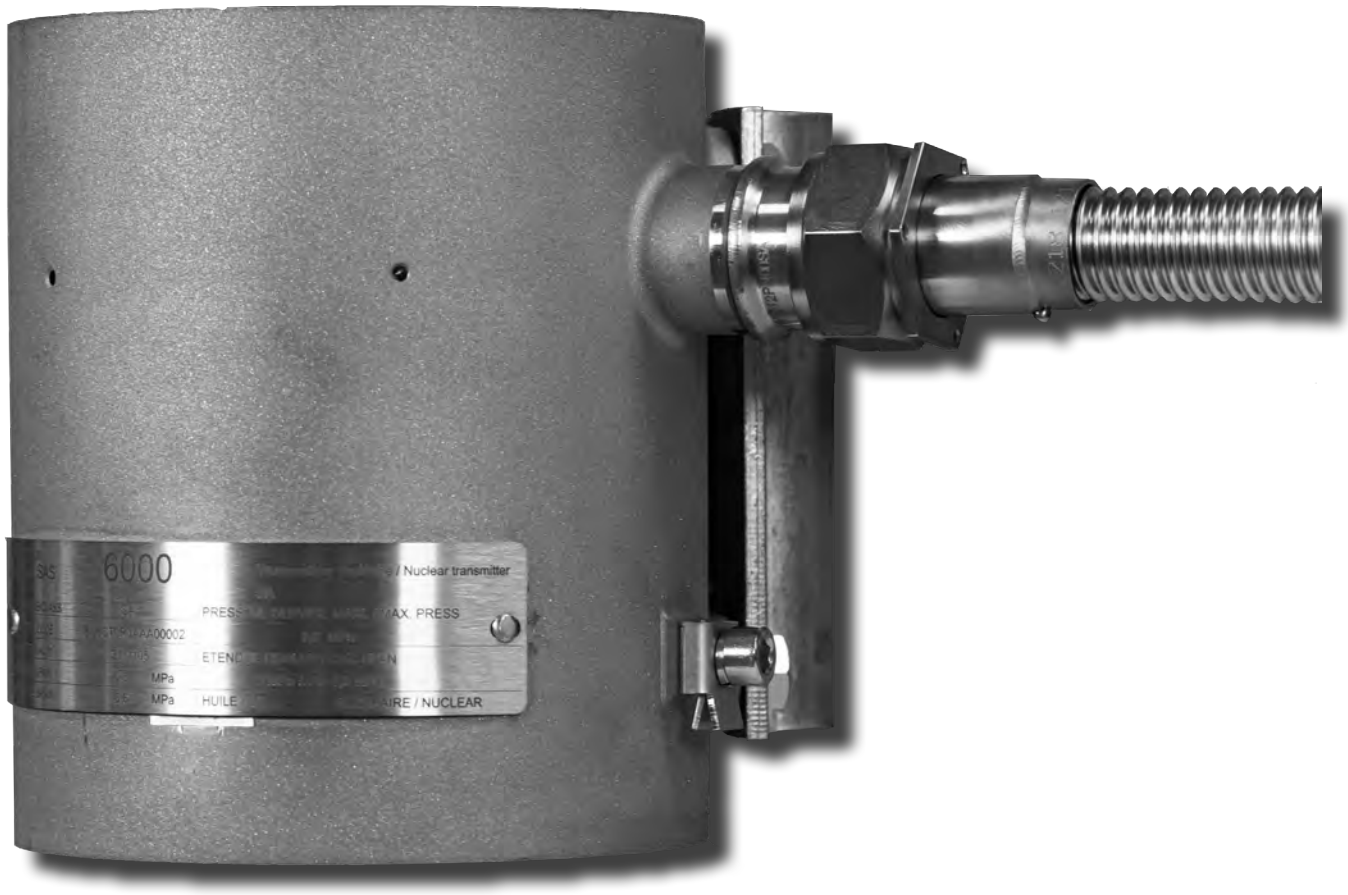
6000
Nuclear transmitter
MPa
MPa
HUILE

BUAS

Relative pressure measurement to control pressure in primary or secondary circuit.

Description

BUAS relative pressure transmitter comprises a measuring cell mounted in a sealed envelope filled with oil. The envelope comprises a base, a cover and a bellows for expansion of the oil as temperature rises.

The measuring cell comprises a base carrying the pressure connector and a Bourdon relative which moves the magnetic core; the rod which transmits the relative displacement to the core is guided by an elastic blade to prevent lateral displacement.

The displacement of the core is measured without contact by a detector comprising two inductors.

Typical application of BUAS transmitter is the pressure control of primary and secondary circuit.

Pressure range

Code	Minimum measuring range		Maximum measuring range		Zero offset		Trial pressure	
	bar g	**MPa g**	**bar g**	**MPa g**	**bar g**	**MPa g**	**bar g**	**MPa g**
BUASM	30	3	100	10	[-1 ; 80]	[-0.1 ; 8]	150	15
BUASP	60	6	250	25	[-1 ; 200]	[-0.1 ; 20]	375	37.5

Functional specifications

Radiation

Accuracy during and after exposure to the following Total Integrated Dose (TID) of gamma radiation.

Code	Total Integrated Dose (TID)		Accuracy
	kGy	**Mrad**	
BUASM and BUASP	[0 ; 250]	[0 ; 25]	±(0.5% URL + 0.5% Span)
	[250 ; 850]	[25 ; 85]	±(0.5% URL + 0.5% Span)

Seismic

Accuracy during and after a seismic disturbance of 35g.

Code	Accuracy
BUASM	± 1.6% URL
BUASP	± 0.65% URL

LOCA

Accuracy during and after a LOCA and during the post DBE operation.

Code	Accuracy
BUASM and BUASP	± (2% URL + 0.5% Span)

Performance specifications

We are able to forecast performance of our transmitters according to conditions. Performance changes if conditions change.

Table below gives performance with the following defined conditions:

- Radiation: normal = 250kGy, accident = 600kGy
- Temperature: normal = 50°C, severe accident peak = 156°C, post severe accident = 70°C
- P&T: see page 7

Code	Span* (bar)	URL* (bar)	Accuracy (% Span)				Response time at 95% (s)			
			NC*	**SC***	**LC***	**SA***	**NC***	**SC***	**LC***	**SA***
BUASM	100	100	0 ± 0.8	-0.8 ± 1.2	-2.2 ± 1.4	-2.2 ± 1.4	<0.75			
BUASP	180	250	0 ± 0.8	-0.4 ± 1	-2.9 ± 1.6	-2.9 ± 1.6				

*NC: Normal conditions; *SC: Seismic conditions; *LC: LOCA conditions; *SA: Severe accident conditions
*URL : Upper range limit; *Span : Set measuring range

BUAA

Relative pressure measurement to control pressure in primary or secondary circuit.

Description

BUAA relative pressure transmitter comprises a measuring cell mounted in a sealed envelope filled with oil. The envelope comprises a base, a cover and a bellows for expansion of the oil as temperature rises.

The measuring cell comprises a base carrying the pressure connector and a Bourdon relative which moves the magnetic core; the rod which transmits the relative displacement to the core is guided by an elastic blade to prevent lateral displacement.

The displacement of the core is measured without contact by a detector comprising two inductors.

Typical application of BUAA transmitter is the pressure control of primary and secondary circuit.

Pressure range

Code	Minimum measuring range		Maximum measuring range		Zero offset		Trial pressure	
	bar g	**MPa g**	**bar g**	**MPa g**	**bar g**	**MPa g**	**bar g**	**MPa g**
BUAAM	30	3	100	10	[-1 ; 80]	[-0.1 ; 8]	150	15
BUAAP	60	6	250	25	[-1 ; 200]	[-0.1 ; 20]	375	37.5

Functional specifications

Radiation

Accuracy during and after exposure to the following Total Integrated Dose (TID) of gamma radiation.

Code	Total Integrated Dose (TID)		Accuracy
	kGy	**Mrad**	
BUAAM and BUAAP	[0 ; 250]	[0 ; 25]	±(0.5% URL + 0.5% Span)
	[250 ; 850]	[25 ; 85]	±(0.5% URL + 0.5% Span)

Seismic

Accuracy during and after a seismic disturbance of 35g.

Code	Accuracy
BUAAM	± 1.6% URL
BUAAP	± 0.65% URL

LOCA

Accuracy during and after a LOCA and during the post DBE operation.

Code	Accuracy
BUAAM and BUAAP	± (2% URL + 0.5% Span)

Performance specifications

We are able to forecast performance of our transmitters according to conditions. Performance changes if conditions change.

Table below gives performance with the following defined conditions:

- Radiation: normal = 250kGy, accident = 600kGy
- Temperature: normal = 50°C, severe accident peak = 156°C, post severe accident = 70°C
- P&T: see page 7

Code	Span* (bar)	URL* (bar)	Accuracy (% Span)				Response time at 95% (s)			
			NC*	**SC***	**LC***	**SA***	**NC***	**SC***	**LC***	**SA***
BUAAM	100	100	0 ± 0.8	-0.8 ± 1.2	-2.2 ± 1.4	-2.2 ± 1.4	<0.75			
BUAAP	180	250	0 ± 0.8	-0.4 ± 1	-2.9 ± 1.6	-2.9 ± 1.6				

*NC: Normal conditions; *SC: Seismic conditions; *LC: LOCA conditions; *SA: Severe accident conditions
*URL : Upper range limit; *Span : Set measuring range

BUAB

Relative pressure measurement to control pressure in primary or secondary circuit.

Description

BUAB relative pressure transmitter comprises a measuring cell mounted in a sealed envelope filled with oil. The envelope comprises a base, a cover and a bellows for expansion of the oil as temperature rises.

The measuring cell comprises a base carrying the pressure connector and a Bourdon relative which moves the magnetic core; the rod which transmits the relative displacement to the core is guided by an elastic blade to prevent lateral displacement.

The displacement of the core is measured without contact by a detector comprising two inductors.

Typical application of BUAB transmitter is the pressure control of primary and secondary circuit.

Pressure range

Code	Minimum measuring range		Maximum measuring range		Zero offset		Trial pressure	
	bar g	**MPa g**	**bar g**	**MPa g**	**bar g**	**MPa g**	**bar g**	**MPa g**
BUABM	30	3	100	10	[-1 ; 80]	[-0.1 ; 8]	150	15
BUABP	60	6	250	25	[-1 ; 200]	[-0.1 ; 20]	375	37.5

Functional specifications

Radiation

Accuracy during and after exposure to the following Total Integrated Dose (TID) of gamma radiation.

Code	Total Integrated Dose (TID)		Accuracy
	kGy	**Mrad**	
BUABM and BUABP	[0 ; 250]	[0 ; 25]	±(0.5% URL + 0.5% Span)
	[250 ; 850]	[25 ; 85]	±(0.5% URL + 0.5% Span)

Seismic

Accuracy during and after a seismic disturbance of 35g.

Code	Accuracy
BUABM	± 1.6% URL
BUABP	± 0.65% URL

Performance specifications

We are able to forecast performance of our transmitters according to conditions. Performance changes if conditions change.

Table below gives performance with the following defined conditions:

- Radiation: normal = 250kGy
- Temperature : normal = 50°C

Code	Span* (bar)	URL* (bar)	Accuracy (% Span)		Response time at 95% (s)	
			NC*	**SC***	**NC***	**SC***
BUABM	100	100	0 ± 0.8	-0.8 ± 1.2	<0.75	
BUABP	180	250	0 ± 0.8	-0.4 ± 1		

*NC: Normal conditions; *SC: Seismic conditions; *LC: LOCA conditions; *SA: Severe accident conditions
*URL : Upper range limit; *Span : Set measuring range

BUAC

Relative pressure measurement to control pressure in primary or secondary circuit.

Description

BUAC relative pressure transmitter comprises a measuring cell mounted in a sealed envelope filled with oil. The envelope comprises a base, a cover and a bellows for expansion of the oil as temperature rises.

The measuring cell comprises a base carrying the pressure connector and a Bourdon relative which moves the magnetic core; the rod which transmits the relative displacement to the core is guided by an elastic blade to prevent lateral displacement.

The displacement of the core is measured without contact by a detector comprising two inductors.

Typical application of BUAC transmitter is the pressure control of primary and secondary circuit.

Pressure range

Code	Minimum measuring range		Maximum measuring range		Zero offset		Trial pressure	
	bar g	MPa g	bar g	MPa g	bar g	MPa g	bar g	MPa g
BUACM	30	3	100	10	[-1 ; 80]	[-0.1 ; 8]	150	15
BUACP	60	6	250	25	[-1 ; 200]	[-0.1 ; 20]	375	37.5

Seismic

Accuracy during and after a seismic disturbance of 35g.

Code	Accuracy
BUACM	± 1.6% URL
BUACP	± 0.65% URL

Performance specifications

We are able to forecast performance of our transmitters according to conditions. Performance changes if conditions change.

Table below gives performance with the following defined conditions:

- Temperature : normal = 50°C

Code	Span* (bar)	URL* (bar)	Accuracy (% Span)		Response time at 95% (s)	
			NC*	SC*	NC*	SC*
BUACM	100	100	0 ± 0.8	-0.8 ± 1.2	<0.75	
BUACP	180	250	0 ± 0.8	-0.4 ± 1		

*NC: Normal conditions; *SC: Seismic conditions; *LC: LOCA conditions; *SA: Severe accident conditions
*URL : Upper range limit; *Span : Set measuring range

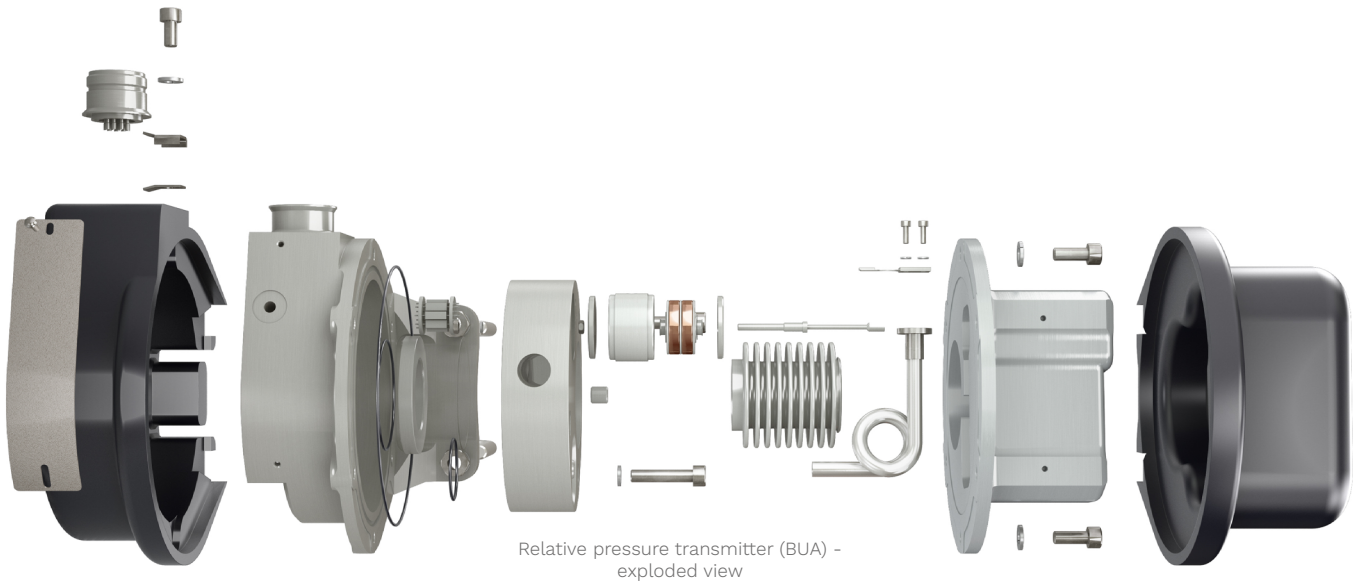

Relative pressure transmitter (BUA) - exploded view

BUA specifications

Relative pressure measurement to control pressure in primary or secondary circuit.

Physical specifications

Characteristics		
Weight		7 kg
Fluid connections		1 ¼” NPT coupling for tube
Mounting		Mounting on Ø60mm maximum horizontal or vertical tube or rack mounting or plate mounting
Electrical connections	Socket (Souriau)	8NA 1Y 12-12 PN00 SA02 (3 wired contacts)
	Plug	8.341.5310
	Seal	EPR and Helicoflex
	Connector with mobile part	8NA 66G 12-12 PSN0
Materials of construction	Sealed envelope 1	Stainless steel
	Base 2	Stainless steel
	Coating 3 (only for BUAS and BUAA)	Elastomer
	Bellows 4	Stainless steel
	Measuring cell base 5	Stainless steel
	Pressure connector 6	Stainless steel
	Bourdon gauge 7	Stainless steel
	Magnetic core 8	FeNi 50
	Rod 9	Stainless steel
	Elastic blade 10	Stainless steel
	Inductors 11	Copper
	Connector base 12	Stainless steel

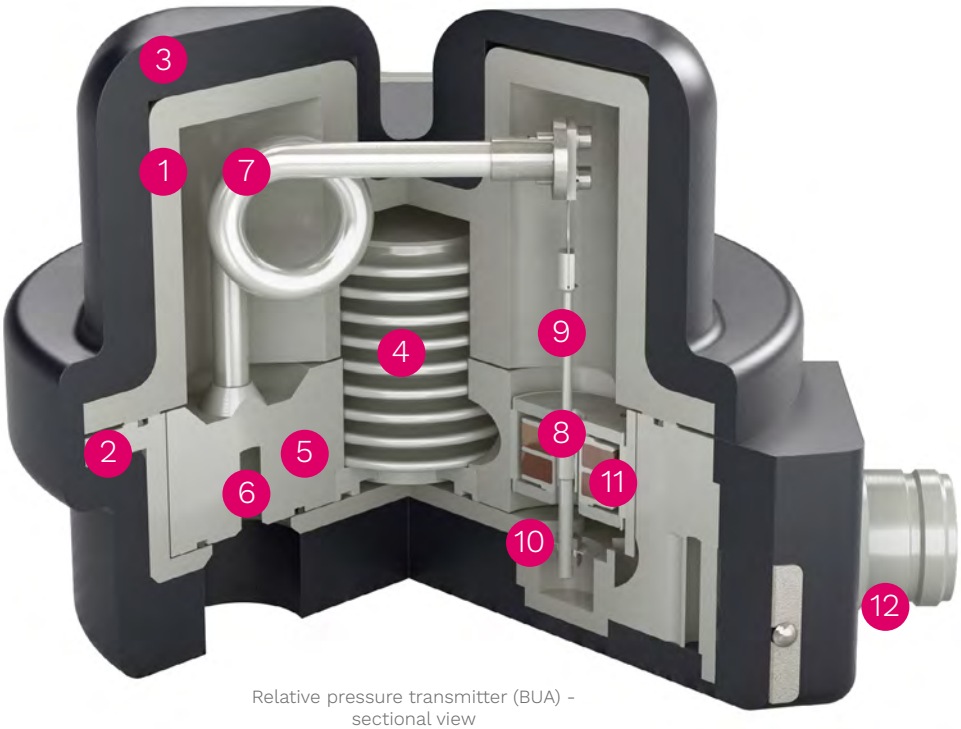

Relative pressure transmitter (BUA) - sectional view

Installation

Bibloc transmitters can be installed in various positions depending on the environment requirements. Please contact us for more information.

BUL - Differential pressure transmitter

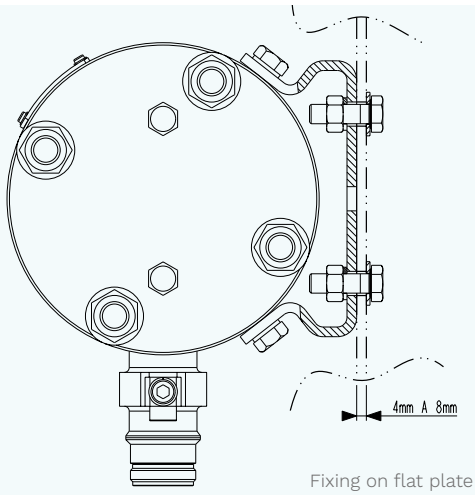

Fixing on flat plate

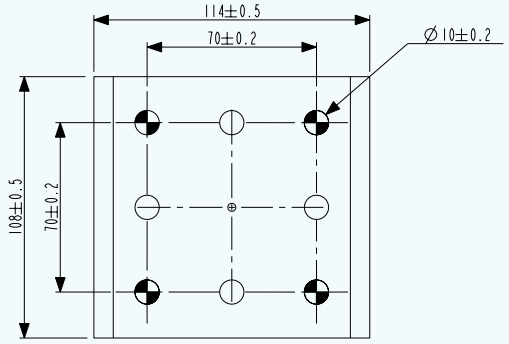

Fixing hole plate detail

BUF - Absolute pressure transmitter

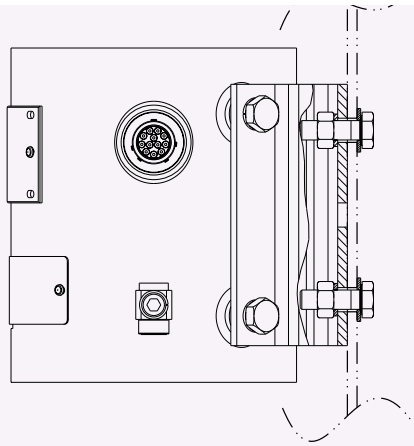

Fixing on flat plate

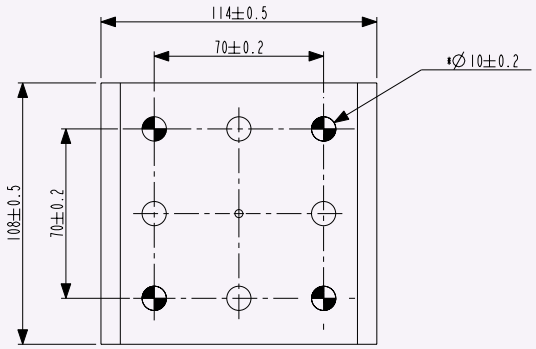

Fixing hole plate detail

BUA - Relative pressure transmitter

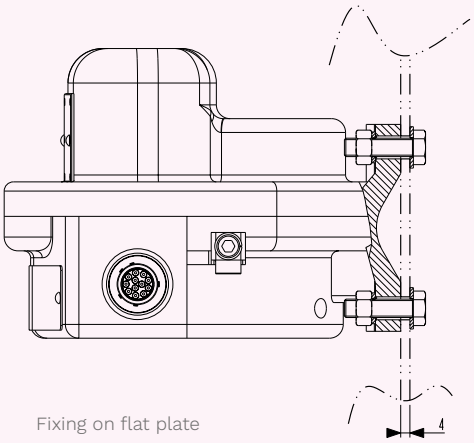

Fixing on flat plate

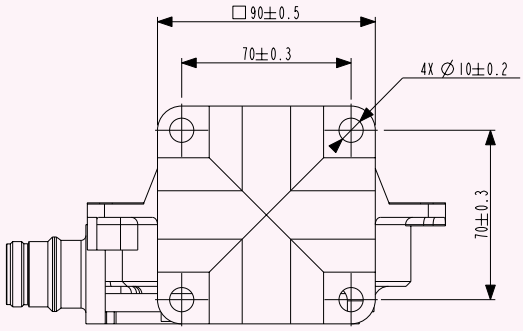

Fixing hole plate detail

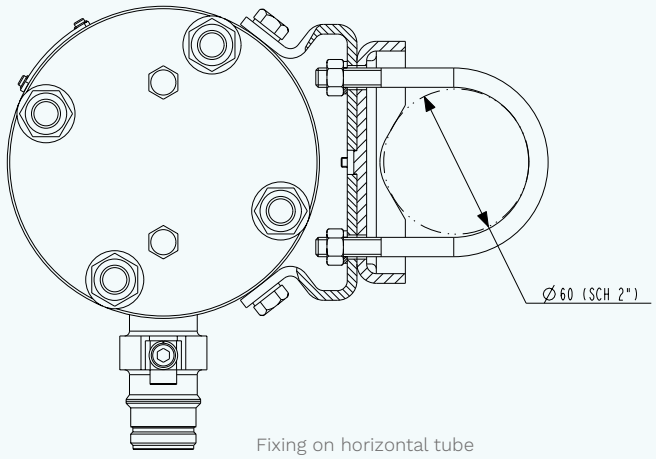

Fixing on horizontal tube

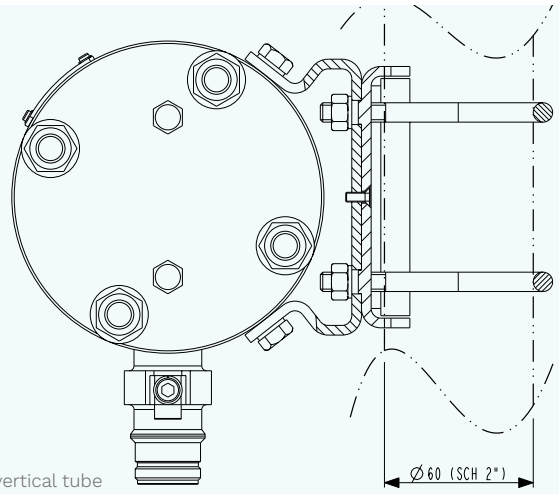

Fixing on vertical tube

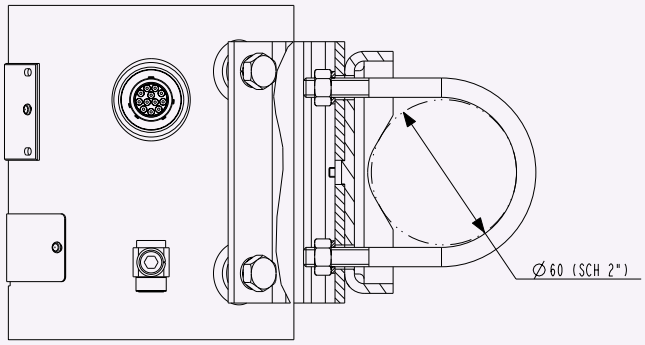

Fixing on horizontal tube

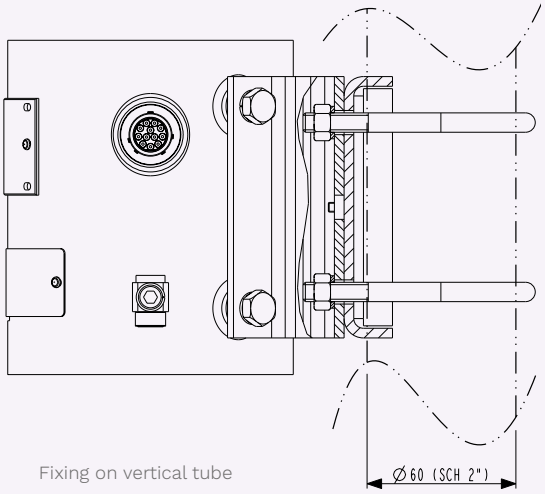

Fixing on vertical tube

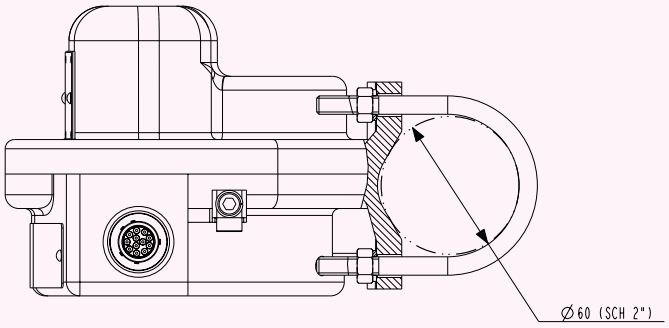

Fixing on horizontal tube

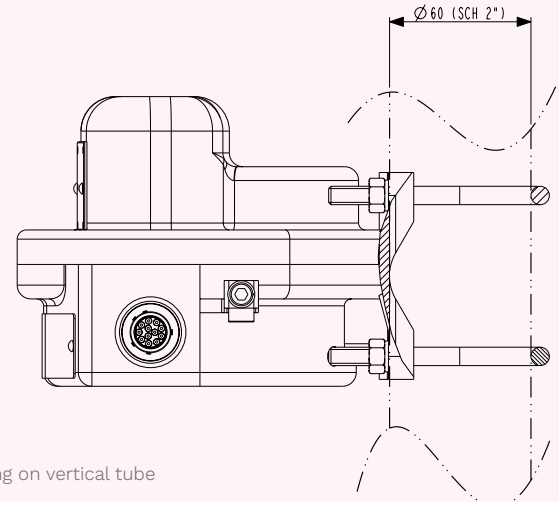

Fixing on vertical tube

BUR

Framatome BUR rack can host up to 14 converter modules.

Description
BUR rack is a Framatome standard 19”, 3 units (U = 44.45 mm) able to host 1 to 14 BUX converter modules.

BUR rack comprises:
- 1 rack structure with front face
- 2 x 14 slides and 14 pluggable connectors for modules
- 1 terminal block for connection to the power supply (screw terminals for max. 4 mm² conductors)
- 1 terminal block for connection to 14 transmitters and receivers (2.85-mm gold-plated clip terminals)

Electrical connection
The connecting cable to the rack is:
- For the sensor, a shielded triad conductor cable
- For the receiver a shielded twisted pair conductor cable
- For the power supply : 1 cable

It shall be connected in accordance with the following table:

Rack terminal	Connecting cable	Transmitter connector pin	Link function
#1	1 mm² wire	Not connected	To receiver (+)
#2	Shield	Not connected	
#3	1mm² wire	Not connected	To receiver (-)
#4	1 mm² wire	#4	Excitation (+)
#5	1 mm² wire	#7	Return (0)
#6	1 mm² wire	#9	Excitation (-)
Power supply “+”	1 mm² wire		External supply
Power supply “-”	1 mm² wire		External supply
Earth	1 mm² wire		Electrical protection

Qualification
The BUR rack and BUX converter are K3 qualified. They had been tested with the sensor (see page 6 - Nuclear qualification).

Functional specifications
The performances described in the paragraph “Functional specifications” of each transmitter type take into account the BUR rack and the BUX converter.

BUR rack equipped with 7 converters

Connection and accessories

A set of qualified connection and advanced accessories for optimum operation of Bibloc transmitters.

Connection

BOA Cord flex

BOA cord flex used by Framatome is an hermetic cord flex between sensor and junction box. BOA cord flex is LOCA and SA qualified.

Typical length of BOA cord flex is 2m, but it can be up to 6 metres.

Junction box

Junction box allows a hermetic link between BOA cord flex and LOCA wire in the containment. This allows connection of up to 6 transmitters per junction box.

Junction box used by Framatome is LOCA and SA qualified (K1 according to RCC-E) and suitable for safety equipment in reactor buildings. Thanks to robust stainless steel shells and high sealing performances, the junction box is designed to operate during normal, accidental and post accidental conditions.

Junction box, BOA cord flex and BUL transmitter

Accessories

JUS simulator

JUS simulator is a portable electronic device allowing users to:

- Characterize and check the zero and span on the converter
- Adjust scale range
- Replace electronic converter in case of failure
- Test the line linking the rack to the sensor
- Perform changes to the measurement range, in the limit of the qualified variations

JUS simulator also simplifies operations such as transmitter pressure calibration and receiver line current calibration.

JUS simulator

Gas presence control

This tool allows checking and quantifying the gas quantity in the sealed systems once filled.

It is composed of:

- Water tank
- Pressure sensor
- Graduated syringe
- 2 valves, 1 for tank isolation and 1 for process isolation

If there is no bubble of gas, water volume injected is low and pressure increases quickly.

If a bubble of gas exists, a higher volume of water is injected and the pressure increases slowly.

Gas presence control

JUV capillary filling case
JUV capillary filling case is a mobile tool allowing filling sealed systems on site.
It is composed of:

- Vacuum pump
- 2 tanks: 1 to fill fluid, 1 to protect the pump
- 3 valves to select and connect the different elements to fill or degass
- 2 outputs: 1 for the capillary to fill, 1 for the vacuum sensor.

The filling principle is as follows:

- Degas the fluid which will be used to filled the capillaries
- Vacuum the capillary, separator and transmitter chamber
- Once vacuum is reached inside capillary, the tank with degassing filling fluid is linked with trough the valves
- Push the filling fluid inside capillary
- Seal the system

Having this operation undertaken by qualified site engineers maintains the LOCA / SA qualification of the sealed system sensor.

JUV capillary filling case

Applications

Framatome transmitters can perform different types of measurements.

Bibloc transmitters, through different configurations - differential, gauge and absolute, are able to perform measurements such as pressure, flow and level.

Examples of applications:

- Pressure control of primary and secondary circuit (gauge)
- Level of reactor vessel (differential)
- Flow rate measurement (differential)
- Pressure control in the containment (absolute)

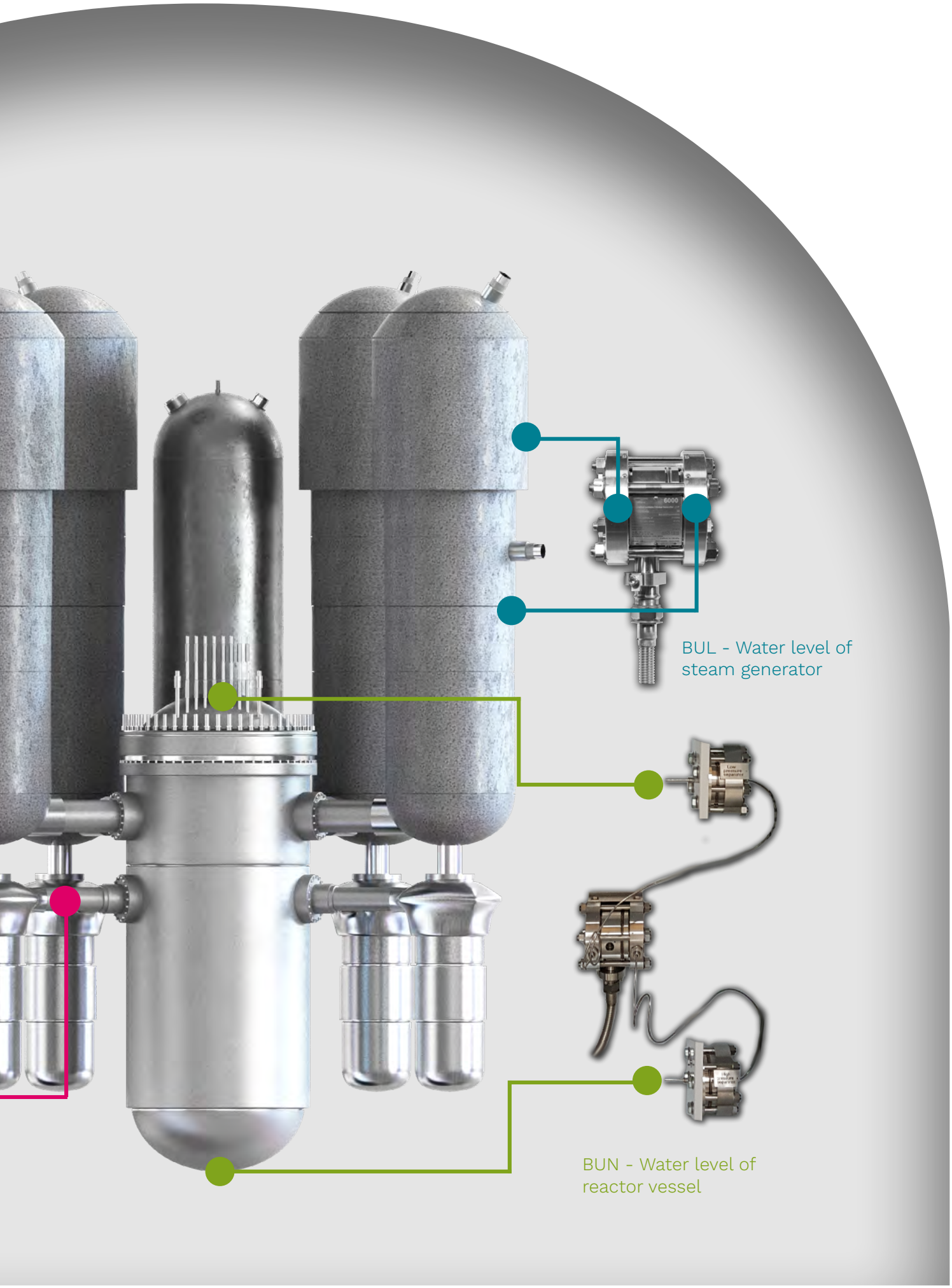
BUL - Water level of
steam generator
BUN - Water level of
reactor vessel

References

50 years' experience allowing us to ensure a 60-year life span.

Framatome Bibloc pressure transmitters have a 50-year feedback experience and are qualified based on a 60-year life span, before accident condition.

Our products have been installed in more than 90 nuclear reactors in 8 countries.

Bibloc transmitters are installed on all EDF reactors in France, including EPR, and have been chosen in China for the CPR1000 new build programme.

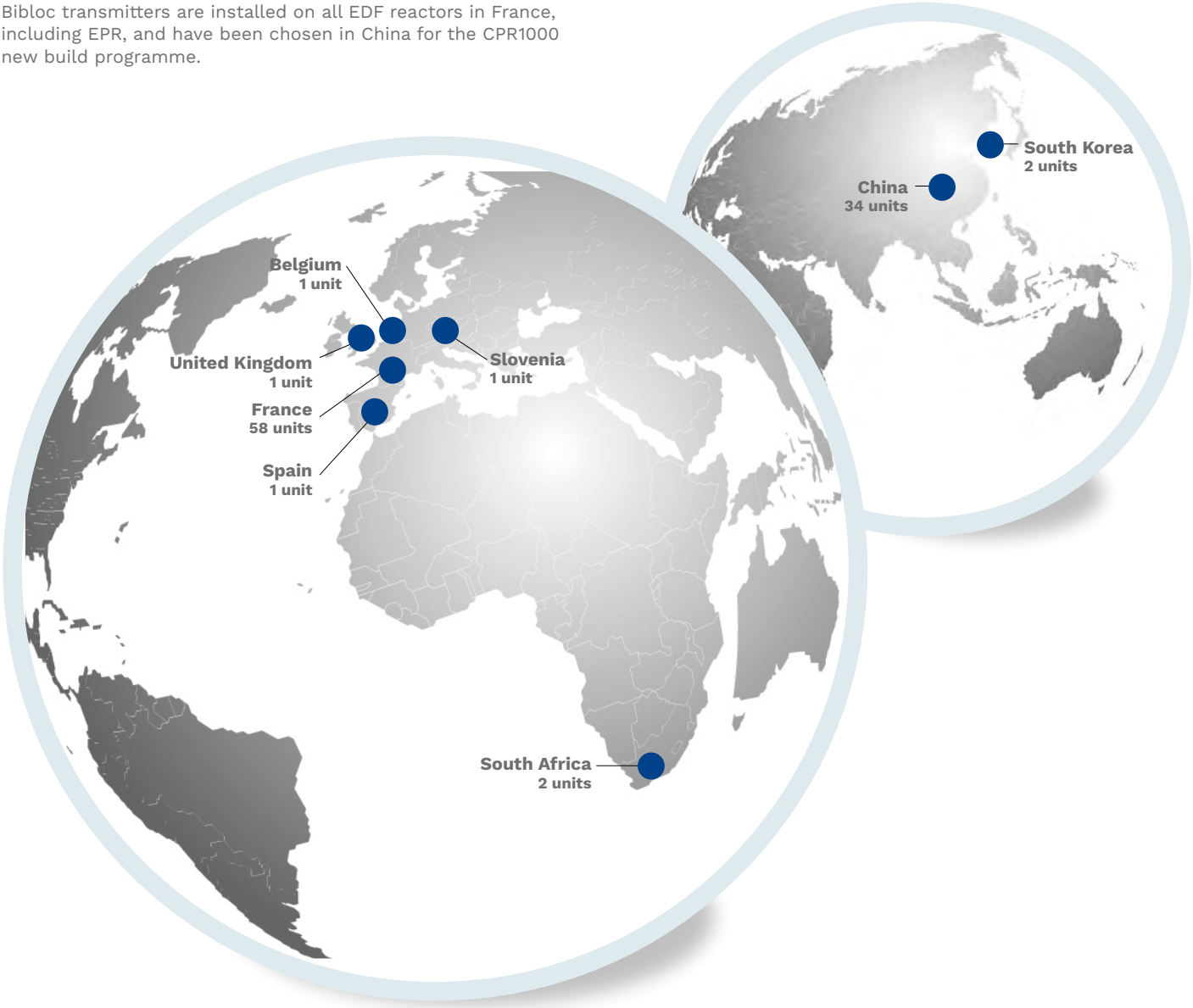

Bibloc codification

1	2	3	4	5	6	7	8	9	10	11	12	13	14	15	16
B	U				0		3	A			0	0	0		

Bibloc transmitter — B U

Transmitter type
A = Relative
F = Absolute
L = Differential
M = Differential with 1 separator
N = Differential with 2 separators

Classification
A = 1EA - K1
B = 1EB - K2
C = K3 & not classified
S = Severe accident

Measurement range
Differential
A = 0 to 60 mbar
B = 0 to 120 mbar
C = 0 to 300 mbar
D = 0 to 600 mbar
E = 0 to 1.2 bar
F = 0 to 3 bar
G = 0 to 6 bar
H = 0 to 12 bar
J = 0 to 30 bar
Relative
L = 0 to 60 bar
M = 0 to 100 bar
N = 0 to 160 bar
P = 0 to 250 bar
Q = 0 to 400 bar
R = 0 to 600 bar
Absolute
T = 0 to 6 bar
U = 0 to 10 bar
V = 0 to 7.5 bar

Electronic converter — 0
0 = without

Electrical connection
D = Embase K1 Deutsch DCIHN
E = Embase K2, K3, NC 8N36 (for fiche 8N35,832 & 831)
Q = BAR K2 without mobile connector Souriau
R = Embase K1 Souriau 8NA12 (for BOA or DHN)
T = Embase K2, K3, NC Souriau 8N45S
X = ATEX: Embase Souriau 8NA12 + cable field plug

Converter supply — 3
3 = With converter supply 24-48Vdc

Fluid contact material — A
A = Pressurized water

Filing Oil
A = Nuclear oil
B = Silicon oil

Accesories
0 = Without
A = With fixing kit

0 0 0

BUM separator configuration
0 = Separator on LP side
1 = Separator on HP side

Calibration
0 = Without
1 = Nominal range
2 = Range tuned – zero shift

Framatome is an international leader in nuclear energy recognized for its innovative solutions and value added technologies for the global nuclear fleet. With worldwide expertise and a proven track record for reliability and performance, the company designs, services and installs components, fuel, and instrumentation and control systems for nuclear power plants. Its more than 15,000 employees work every day to help Framatome's customers supply ever cleaner, safer and more economical low-carbon energy.

Visit us at: www.framatome.com, and follow us on Twitter: @Framatome_ and LinkedIn: Framatome.

Framatome is owned by the EDF Group (75.5%), Mitsubishi Heavy Industries (MHI – 19.5%) and Assystem (5%).

Scan the QR code to browse our solutions by market area.

Framatome
Tour AREVA. 1 Place Jean Millier
92400 Courbevoie, France

ic@framatome.com
communication@framatome.com
www.framatome.com